MICRO-SENSOR

INERTIAL SENSORS

Micro-Sensor | Product Catalog 2017 / 2018

Micro-Sensor GmbH is an expanding technology company focused on acceleration, inclination and rotation rate sensors based on inertial measurement principles.
For more than 15 years the company stands for safety relevant railway and industrial sensors. Our products represent outstanding measurment solutions based on progressive measurement principles for all industrial applications. We develop and produce sensors with embedded software and interfaces especially designed for industrial purposes.
Micro-Sensor is part of the Micro-Epsilon Group.

Dear readers,

I'm very pleased to present you with our new catalog for inertial sensors.

Thanks to the fact that we are focusing 100% on MEMS-based acceleration, location and inclination sesors, we are now offering quality products with excellent technical properties.

In addition to the standards available in the catalog, we understand ourselves to be a „solution provider" who can realise your specific vision in cooperation with yourselves.

Our above-average innovative capacity has allowed us to extend our product portfolio: one of the highlights in this case are the digital sensors. The two AccIS and AccSENS product lines now enable us to offer digital inclination and acceleration sensors. First of all the customer can now select between the RS485 interface and CANopen. In addition to digital communication and network capabilities, you also get outstanding metrological properties. The sensors defy rough environmental conditions with housing variations up to a protection class of IP 69K. You can find an overview of our product portfolio on pages 4 + 5.

For the first time, Micro-Sensor is now presenting the **SensorFUSION** concept for inclination sensors. You can use the AccIS dynamic product line to determine the inclination quickly and precisely despite the influence of massive vibration. You have a measurement range covering a complete 360° at high resolution and precision. The internal sensor signal processing with simultaneous usage of accelerometer and gyroscope technology enables fast response times with simultaneous, excellent interference suppression.

µSensTOOL is our new, unique tool for configuring all sensors in the ACC SERIES. You can order your product sample via our Internet page and download the configuration software free of charge onto your device: plug and play!
Start experimenting with the sensor immediately and carry out parameterisation as required. You can carry out evaluations and tests without complicated setting-up procedures. Specify the sensor for your measurement or testing task. A range of graphic and charting tools are available for evaluations.

I'm sure of one thing: our products will improve your system! Together we can draw up technically innovative solutions which will lead to significant competitive advantages for you as a customer. Let's give the world more dynamics together:

Intelligent dynamics.

Micro-Sensor's devices are used in a broad variety of applications. They are fit for industrial purposes as well as for safety applications in railway vehicles. Find a composition of application examples in this section.

Micro-Sensor creates a new level of high performance inclination measurement by using the advantages of different measurement principles merged together in a revolutionary algorithm.

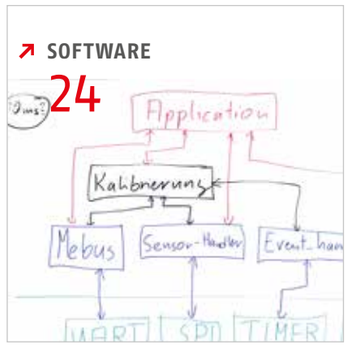

We do not only provide standardized sensors, Micro-Sensor cooperates with customers for optimal measurement solutions according to specific requirements.

Content

04 MICRO-SENSOR PROFILE
- 04 Product overview
- 06 Why Micro-Sensor?

08 PRODUCTS
- 08 **Inclination sensors**
- 10 **AccIS100** Single axis inclinometer
- 11 **AccIS102** Biaxial inclinometer
- 12 **AccIS100 dynamic** Single axis Inclinometer with dynamic extension **SensorFUSION**
- 13 **AccIS102 dynamic** Biaxial inclinometer with dynamic extension **SensorFUSION**
- 14 **Acceleration sensors**
- 16 **BG2166** BG-SERIES analogue acceleration sensor ± 30 g / ± 50 g
- 17 **BG2168** BG-SERIES analogue acceleration sensor ± 2g
- 18 **AccTRANS4** Analogue vibration sensor for railway applications
- 19 **AccTRANS+** Analogue vibration sensor for railway applications
- 20 **AccSENS103** Digital triaxial acceleration sensor
- 21 Product keys
- 22 **Angular rate sensors**
- 23 **CoriSENS** Analogue angular velocity sensor for railway applications

24 SOFTWARE
- 26 **µSensTOOL**
- 27 Medaqlib

28 SensorFUSION
- 30 **SensorFUSION**
- 31 Example

32 APPLICATIONS
- 34 **Inclination measurement**
- 36 Inclination sensors for the stability of cranes and platforms
- 37 Inclination sensors for solar power plants
- 38 **Industrial acceleration measurement**
- 39 Acceleration measurement in agriculture machinery
- 40 **Angular rate measurement**
- 41 Dynamic sensors for curve detection

42 OEM DEVELOPMENT
- 44 OEM development
- 45 Micro-Epsilon Group

46 ACCESSORIES AND STARTER KITS
- 46 Connection cables for BG- and Acc-SERIES
- 47 AccIS100 starter kit
AccIS100 dynamic starter kit
AccSENS103 starter kit

48 FACTS AND FIGURES

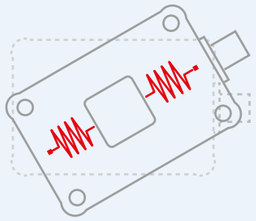

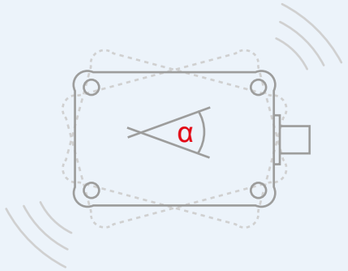

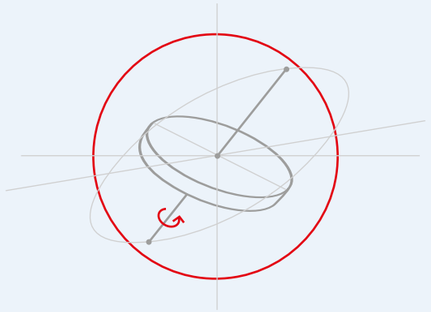

INERTIAL SENSORS

Acceleration and Vibration sensors

ANALOGUE

ANALOG

- Industrial sensors
  - BG2168
  - BG2166
- EN50155 (Railway)
  - AccTRANS4
  - AccTRANS+

DIGITAL

RS-485 · CANopen

- Industrial sensors
  - AccSENS103

Inclination sensors

DIGITAL

RS-485 · CANopen

- Conventional industrial sensors
  - AccIS100
  - AccIS102
- Industrial sensors with SensorFUSION
  - AccIS100 dynamic
  - AccIS102 dynamic

Angular rate sensors

ANALOGUE

ANALOG

- EN50155 (Railway)
  - CoriSENS

Why Micro-Sensor?

The process of the industrial and life's digital transformation is one of the heaviest challenges in our world. Those who are able to react on the big amount of collected data will profit from it.

Precise and sophisticated measuring systems and sensors are needed to evaluate and proceed the data. Micro-Sensor inertial sensors are developed just for this matter, especially for measuring purposes in industrial environments.

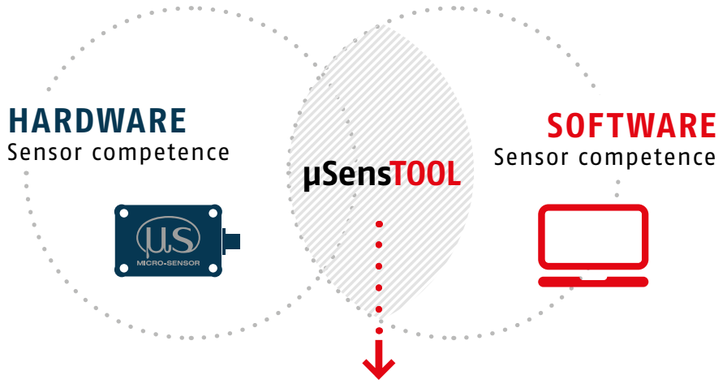

Intelligent dynamics.

Digital industrial communcation

Micro-Sensor inertial sensors – benefit from sensor intelligence:

- *Quick and easy configuration of the sensor's parameters*
- *Solution for an individual measuring issue without evaluating and testing a large number of different sensors*
- *Easy adaption of previously unknown parameters concerning the measurement range, high or lowpass filter required for your application with our configuration software* **µSensTool**

These benefits enable you to pass through the configuration process, change and test all parameters right at the location of your application. Safe time and money uniting the performance of most competitors' complete product range in just one sensor.

Application fields of our sensors can be found in various branches such as **construction** or **agricultural machines** as well as **industrial automatization**. Due to the robust and rugged housing there is no interference in the measuring signal even in rough environments. Our sensors are also suitable for the use in safety applications like derailment protection of railway vehicles. Our railway products are certified in accordance with EN 50155.

Sensor performance spectrum:

- *High performance industrial sensors AccIS (inclination sensors) and AccSENS (acceleration sensor)*
- *Economy line industrial analogue sensors BG-SERIES*
- *Railway sensors*

The analogue sensor product line is the choice for cost-sensitive mass-applications with high volume production.

Micro-Sensor's strengths are more than just high performance standard sensors. With specific adaptions on our standard products we create the sensor solution for your measurment requirements. We also develop individual solutions according to our customers' obligations.
Micro-Sensor – inertial sensors 100% custom-designed!
We are proud to be the competence centre for inertial sensors among the enterprises of the Micro-Epsilon Group.

PRODUCTS

Inclination sensors measure the inclination of an object in relation to the earth's center of gravity, just like bubble levels. The basis of an inclinometer is a classical capacitive acceleration sensor, which measures the earth's acceleration in the direction of the earth center.

Inside the sensor a micro-electromechanical spring-mass-system measures a capacity displacement which generates the output signal. To determine the inclination of an object relative to the earth's acceleration, measurements have to be performed in two axes.

With the absolute value of the orthogonal acceleration vectors it is possible to calculate the angle of the resulting vector – the inclination to be evaluated. Inertial sensors do not need any external reference to detect zero position. The hermetically sealed housing is another great advantage for industrial use.

A robust aluminum die-cast housing and the feasible connection via cable gland make our sensors be extremely resistant against harsh environments:

- ***dirt***
- ***dust***
- ***stone chipping***
- ***humidity.***

There is no limit of our inclination sensors' measurement range. It covers full 360°. If a lower measuring range is required, it can easily be adapted with our configuration and visualization software **µSensTOOL**.

Product overview inclination sensors

Product	Axes	Interface	Connector	Measurement principle
AccIS100	1	RS485, CANopen, analogue U/I	Cable gland or M12 connector	Inclination out of acceleration
AccIS100 dynamic	1	RS485, CANopen, analogue U/I	Cable gland or M12 connector	SensorFUSION
AccIS102	2	RS485, CANopen, analogue U/I	Cable gland or M12 connector	Inclination out of acceleration
AccIS102 dynamic	2	RS485, CANopen, analogue U/I	Cable gland or M12 connector	SensorFUSION

Ask our sales team for more information about the sensors and order product samples on www.micro-sensor.com.

Inclination sensors

situational awareness in relation to earth gravity

AccIS100

RS-485 CANopen ANALOGUE

Single axis inclinometer

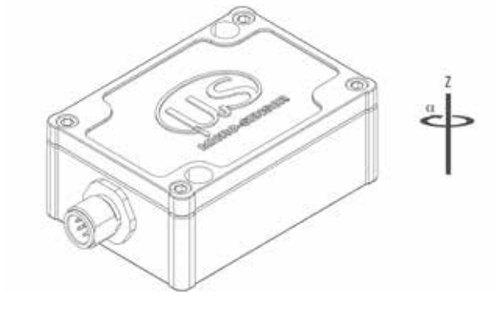

General characteristics

- *Full measurement range of 360°*
- *High sampling rate and bandwidth*
- *High resolution (0,000224°)*
- *High accuracy (< ± 0,1°)*
- *Outstanding temperature stability*
- *Low cross-axis sensitivity*
- *Adjustable filter setting*
- *Metal housing (IP67 / IP69K) die-cast aluminum*
- *Supply voltage 5–32 V DC*

Applications

- *Tilt measurement of mechanical systems*
- *Recognition of exceeding critical angles*
- *Recognition of tool position in complex machine systems*

Configuration features

- *Lowpass filter*
- *Measurement range*
- *Customized offset, zero setting*
- *Output signal type current or voltage*

↗ **For detailed information see p. 26, section µSensTOOL**

AccIS100 is a classic inclination sensor which measures inclination on the base of acceleration data relative to earth gravity.

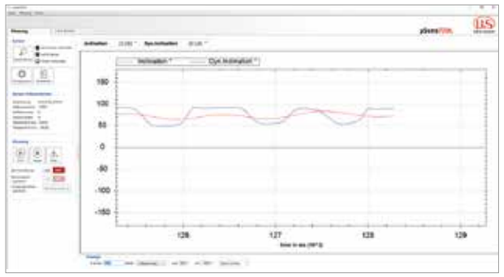

Signal sequence visualized in **µSensTOOL**

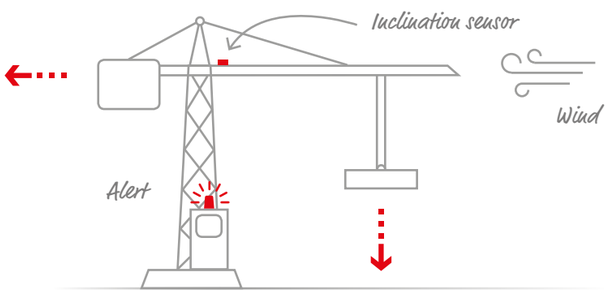

This product is available as starter kit comprising the sensor, a quick start guide, cable and adapter to connect the sensor to your PC and start configuration right away.
↗ **AccIS100 starter kit – 6602.01-8.51**

AccIS102

RS-485 CANopen ANALOGUE

Biaxial inclinometer

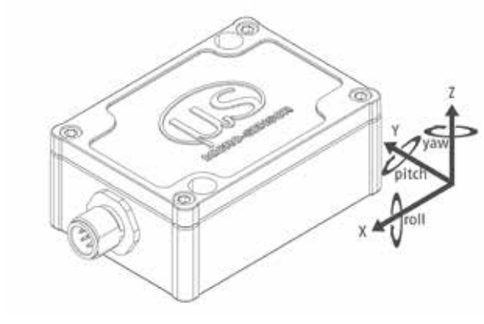

AccIS102 is a classic inclination sensor which measures inclination at two axes based on the acceleration data in relation to earth gravity.

- *Three output channels configurable with one of the following signals: inclination, acceleration or angular rate*
- *Max. two inclination signals*

This product is available as starter kit comprising the sensor, a quick start guide, cable and adapter to connect the sensor to your PC and start configuration right away.
↗ **AccIS102 starter kit – 6602.01-8.51**

General characteristics

- *Full measurement range of 360°*
- *High sampling rate and bandwidth*
- *High resolution (0,000224°)*
- *High accuracy (< ± 0,1°)*
- *Outstanding temperature stability*
- *Adjustable filter setting*
- *Metal housing (IP67 / IP69K) die-cast aluminum*
- *Supply voltage 5–32 V DC*

Applications

- *Tilt measurement of mechanical systems in two dimensions*
- *Recognition of exceeding critical angles*
- *Platform alignment*

Configuration features

- *Lowpass filter*
- *Measurement range*
- *Customized offset, zero setting*
- *Output signal type current or voltage*

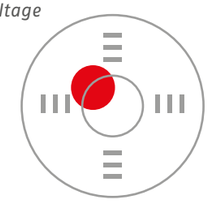

AccIS100 dynamic

RS-485 CANopen ANALOGUE

Single axis inclinometer with dynamic extension (SensorFUSION)

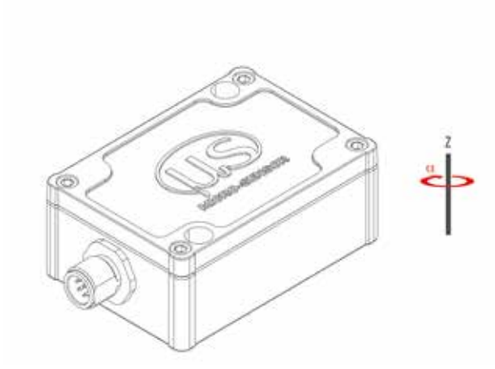

AccIS100 dynamic is an inclination sensor based on AccIS100. The implemented algorithm for the fusion of measured data out of an accelerometer and a gyroscope grants outstanding stability without the disturbing time latency caused by application of causal filters.

General Characteristics

- *Revolutionary high performance* **SensorFUSION** *filter*
- *Full measurement range of 360°*
- *High sampling rate and bandwidth*
- *High resolution (0,000224°)*
- *High accuracy (< ± 0,1°)*
- *Outstanding temperature stability*
- *Low cross-axis sensitivity*
- *Adjustable filter setting*
- *Metal housing (IP67 I IP69K) die-cast aluminum*
- *Supply voltage 5 – 32 V DC*

Applications

- *Fast and precise measurement of inclination in mechanically disturbed environments*

Configuration features

- *Emphasis of either gyro or acceleration influence*
- *Lowpass filter*
- *Measurement range*
- *Customized offset, zero setting*
- *Output signal type current or voltage*

Unfiltered, without **SensorFUSION**

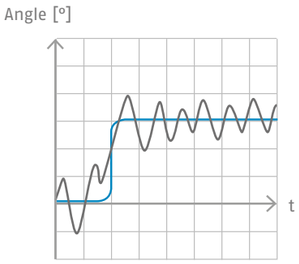

— *reference*

— *Inclination sensor, unfiltered (angle related to gravity)*

Lowpass filtered, without **SensorFUSION**

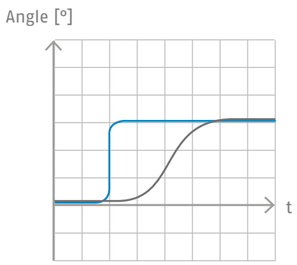

— *reference*

— *Inclination sensor, filtered (high interference immunity but high deceleration)*

SensorFUSION

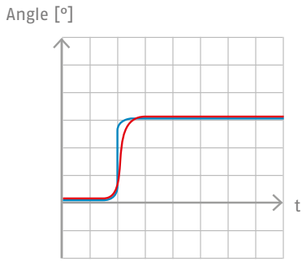

— *reference*

— *Sensor fusion (fast response at high interference immunity)*

RS-485 CANopen ANALOGUE

AccIS102 dynamic

Biaxial inclinometer with dynamic extension (SensorFUSION) IMU (Inertial measurement unit)

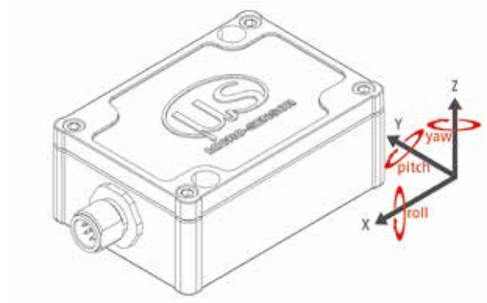

AccIS102 dynamic is a biaxial inclination sensor. It is a follow-up of the AccIS102. With its 6 degrees of freedom it is capable of measuring not only the two-dimensional situation of the respective object but to deliver the raw signals of the acceleration sensors and the gyroscopes on each axis.

↗ For detailed information see p. 26, section µSensTOOL

AccIS102 dynamic is Micro-Sensor's first IMU with six degrees of freedom. Depending on your chosen configuration it is able to put out inclination signals along each axis as well as acceleration or angular velocity.

General Characteristics

- *Revolutionary high performance* **SensorFUSION** *filter*
- *Full measurement range of 360°*
- *High sampling rate and bandwidth*
- *High resolution (0,000224°)*
- *High accuracy (< ± 0,1°)*
- *Outstanding temperature stability*
- *Low cross-axis sensitivity*
- *Adjustable filter setting*
- *Metal housing (IP67 I IP69K) die-cast aluminum*
- *Supply voltage 5 – 32 V DC*

Applications

- *Fast and precise measurement of inclination in mechanically disturbed environments*

Configuration features

- *Emphasis of either gyro or acceleration influence*
- *Lowpass filter*
- *Measurement range*
- *Customized offset, zero setting*
- *Output signal type current or voltage*
- *Output signal (inclination, angular velocity, acceleration)*

Acceleration sensors

detect mechanical overload and prevent your system from taking damage

Acceleration sensors measure the change rate of an object's velocity with the help of the latest MEMS-chip technology. These accelerometer chips measure acceleration on the base of a plate capacitor.

The capacitor consists of two fixed electrodes and one electrode suspended elastically in the centre of the outer fixed electrodes. External acceleration causes the flexible electrode to shift away from its centred position. That leads to a capacity displacement between the different capacitor electrodes. Finally the actual acceleration can be calculated from this capacity shift.

Besides the measurement of pure acceleration our sensors are also fit to measure vibration as a result of continuous alternating acceleration. The frequency to be measured with our sensors depends on the applied low pass filter.

When the filter is set to a higher frequency, e.g. 1.000 Hz, each frequency lower than this will be measured and put out as a signal. With a lower lowpass frequency the measurement result fades out any disturbing vibrations which are higher than the chosen frequency.
Micro-Sensor acceleration sensors cover a wide spectrum of analogue products as well as digital sensors.

The economy sensor line consists of analogue industrial sensors – the BG-SERIES (page 16/17) is ideal for price-sensitive applications.

Furthermore Micro-Sensor offers acceleration sensors specially designed for railway applications (page 18/19). All products of this category meet special railway safety standards according to EN50155 and feature special power supply ranges, e.g. to use with the on-board power supply of the train.

AccSENS103 represents the digital acceleration measurement products as a true multi-talent. Thanks to its sophisticated configuration options it is the perfect match for any application.

Applications

- *Analysing vibration spectra for predictive maintenance purposes*
- *Detecting mechanical overload*
- *Detection of impacts or collision of objects*
- *Indentifying and monitoring the motion status of objects*

Product overview acceleration sensors

Product	Axes	Measurement range	Interface	Application
BG2166	1 or 2	± 30 g or ± 50 g	Analogue U/I	Industrial sensors
BG2168	1 or 2	± 2 g	Analogue U/I	Industrial sensors
AccTRANS4	1	± 4 g	Analogue I	Railway sensors (EN50155)
AccTRANS+	1	± 1 g	Analogue I	Railway sensors (EN50155)
AccSENS103	3	± 8 g	RS485, CANopen, analogue U/I, switch	Industrial sensors

Ask our sales team for more information about the sensors and order product samples on www.micro-sensor.com

BG2166

ANALOGUE

BG-SERIES analogue acceleration sensor ± 30 g / ± 50 g

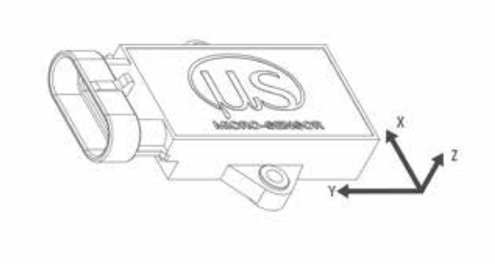

General Characteristics

- *Voltage or current output*
- *Select up to two axes out of x, y and z*
- *Custom filter settings*
- *IP67 sealed housing*
- *Resistant against most of corrosive substances*

Applications

- *Detection of shocks in machines of all kind*
- *Documentation of a shock history for fragile cargo*
- *Recognition of stones in flail mowers*

BG2166 is a heavy duty analogue accelerometer for accelerations up to 50 g. It is available in different configurations (see product key on page 21).

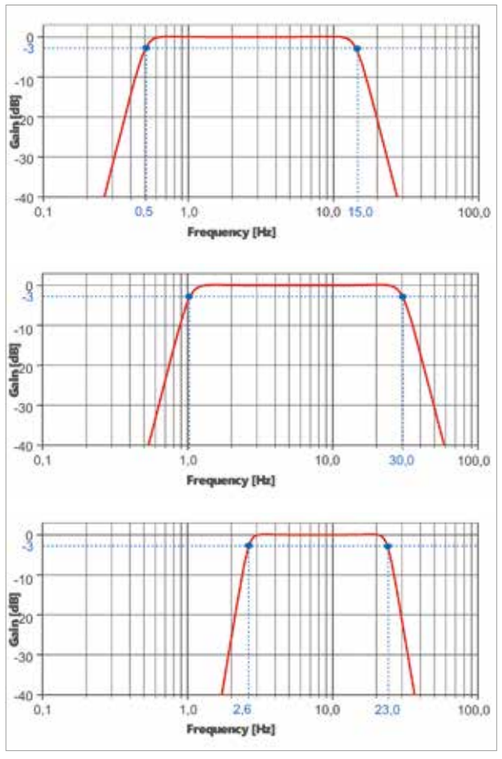

Micro-Sensor's BG SERIES – effective production cycles for short delivery times

Customizable lowpass frequencies

ANALOGUE

BG2168

BG-SERIES analogue acceleration sensor ± 2g

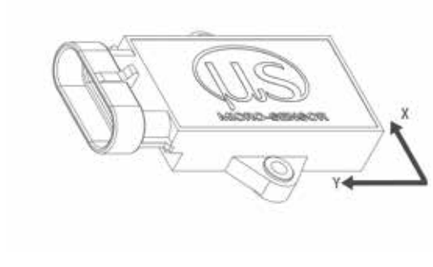

Micro-Sensor's product series for analogue acceleration measurement. **BG2168** is available in different configurations (see product key on page 21).

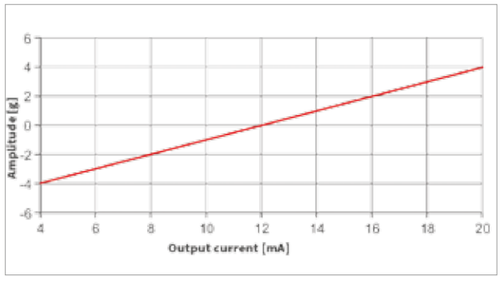

Anlogue output related with measured variable

The analogue output signal opens easy access to evaluation just by using an electric multimeter.

General characteristics

- *Voltage or current output*
- *1 or 2 axes*
- *Various lowpass filter settings*
- *IP67 sealed housing*
- *Resistant against most of corrosive substances*

Applications

- *Detection of vibrations in industrial machines*
- *Detection of mechanical overload*
- *Precautionary shutdown of wind turbines*

Advantages of our BG-SERIES

- *The BG sensor series is Micro-Sensors „economy" product line. These sensors are ideal and reliable components in price sensitive products and applications.*
- *Easy installation predetermined screw holes to mount it on a variety of devices.*
- *High reliability due to a low failure rate of electrical components.*

AccTRANS4

ANALOGUE

Analogue vibration sensor for railway applications

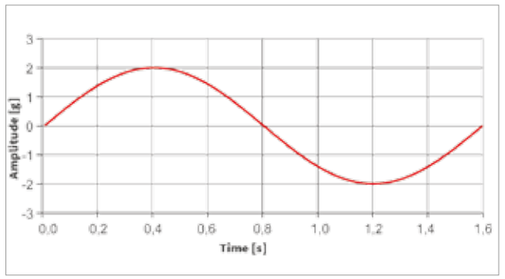

Sinusoidal oscillation $a(t) = \hat{a} \cdot \sin(\omega \cdot t)$

General characteristics

- *Measurement range ± 4g*
- *Extremely robust stainless steel housing*
- *Protection class IP68*
- *Wide supply voltage range from 70 up to 160 V*

Advantages

- *Appropriate for use outside the train*
- *Direct connection to the on-board power supply*
- *Conform to EN 50155 railway safety standard*

Customizable features

- *Measurement range*
- *Frequency range*
- *Connector*
- *Additional measurement axis*

AccTrans4 is Micro-Sensor's most robust acceleration transducer specially customized to meet the high requirements of railway transportation standards.
Its stainless steel housing offers properties which make it possible to attach the sensor at the outskirt area of trains, e.g. on its bogies.

The safe operation of railway vehicles is one of the important application fields of AccTRANS4. It helps to protect trains from severe accidents caused by derailment. Typically the width of a train's axle is not identic to the width of the railway track it is sitting in. This instance causes the axle to oscillate left and right.
With the AccTRANS4 it is possible to measure this vibration which, if esceeding a certain level, might be the cause for derailment. The sensor puts out the respective sinusoidal analogue signal. This signal is fed into the controlling unit of the train which is able to initiate brake application to slow the train down.
Even though the AccTRANS4 is an anlogue product, Micro-Sensor offers the opportunity to customize certain parameters exactly for your requirements.

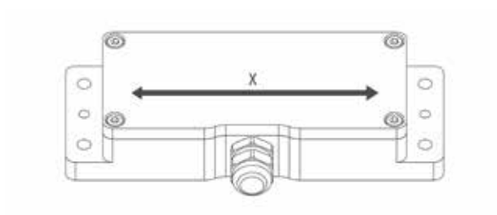

EN 50155

ANALOGUE

AccTRANS+

Analogue vibration sensor for railway applications

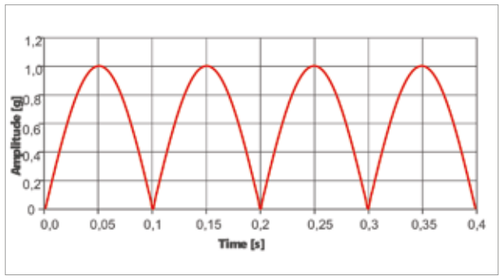

Rectified sinusoidal signal $|a(t) = \hat{a} \cdot \sin(\omega \cdot t)|$

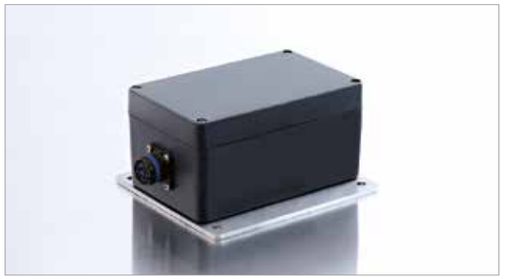

AccTrans+ is a specially designed acceleration transducer at the base of the AccTRANS4.

This sensor is ideal for applications where just the absolute value of a vibration's amplitude is important. Similar to the AccTRANS4, the signal of the AccTRANS+ is used to obtain information about the train's secure operation on its track.

Conform to the EN 50155 railway safety standard this product is ready to install on any relevant position at railway vehicles. Due to many customizable features like measurement range, frequency range or the design of the connector plug, there is a broad variety of useful combinations on your application.

For further information refer to the datasheet on our homepage or contact our sales team +49 36601 592-261

General characteristics

- *Rectified signal shows only absolute amplitudes*
- *Standard measurement range ± 1 g (customizable)*
- *Extremely robust housing*
- *Protection class IP66*
- *Wide supply voltage range from 70 up to 160 V*

Advantages

- *Reads the amplitude as rectified positive signal*
- *Direct connection to the on-board power supply*
- *Extremely robust*
- *Conform to EN 50155 railway safety standard*

Customizable features:

- *Measurement range*
- *Bandpass frequencies*

EN 50155

AccSENS103

RS-485 CANopen ANALOGUE

Digital triaxial acceleration sensor – a highly versatile accelerometer to measure acceleration in x, y and z direction

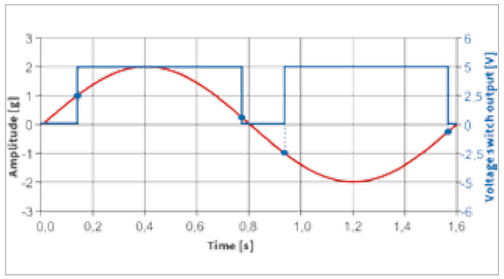

Configured switch output at a threshold value of ± 1g (on) and ± 0,1g (off)

General characteristics

- *High resolution (up to 256.000 LSB/g)*
- *High temperature stability*
- *Hermetically sealed housing (IP67, IP69K) aluminum die-cast*
- *Low cross axis sensitivity*

Applications

- *Vibration monitoring*
- *Precautionary shutdown of industrial facilities*
- *Predictive maintenance*
- *Detection of maloperation of lathes or milling machines*

Advantages

- *All three axes in one sensor*
- *The numerous configuration possibilities offer chances for a variety of applications.*
- *The configurable switching output makes downstream controlling units dispensable.*

It covers a measurement range up to ± 8g. The sensor uses three MEMS accelerometers to determine acceleration in each cartesian direction. In combination with **µSensTOOL** the sensor provides a vast variety of settings. The required output signal (current, voltage, digital RS485) and numerous sampling rates and filter settings can be adapted.

An additional software configuration tool qualifies this sensor for practical applications: **µSensTOOL**. Easily use the sensor as an acceleration driven switch: Just set up a threshold value to switch a channel on or off. Even analyzing the spectra of vibrations is no longer a problem thanks to the optional Fourier-Transformation to be seen in the GUI.

↗ **AccIS103 dynamic starter kit – 6630.01-8.51**
Order the ultimate measurement and monitoring device in one starter kit – ready to use with our configuration software. It comprises the acceleration sensor, a Serial-to-USB adapter and a 2 meter connection cable.

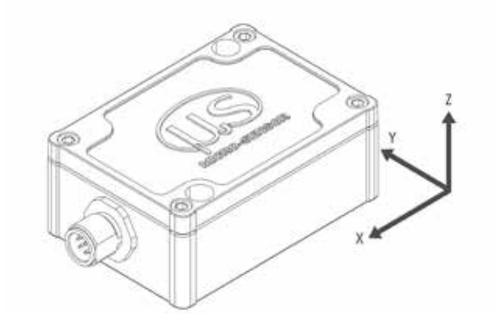

Product keys

Our sensors as well as the sensor accessories are available in different specifications. These product keys give an overview about the different options.

Please note that we can adapt further features according to your requirements.

↗ **For more information contact us:**
+49 36601 592-261 / sales@micro-sensor.com
www.micro-sensor.com

BG SERIES

BG2168

BG2168.2- 1 U T1

series name

axes
1 = one axis
2 = two axes

interface
U = voltage output
I = current output

filter
T0 = 100 Hz
T1 = 10 Hz
T2 = 1000 Hz

BG2166

BG2166.2- 30 N Z -F

series name

measurement range
02 = 2 g
30 = 30 g
50 = 50 g

pin 1
X = x-axis
N = not connected

pin 2
Z = z-axis
Y = y-axis
N = not connected

dynamic (optional)
F = fast response

Cable set for BG SERIES

BGCA- 001- 3 1 0

series name

length
001 = 1 m
004 = 4 m
010 = 10 m
020 = 20 m

no. of poles
3 = 3 pole
4 = 4 pole

shielding
0 = unshielded
1 = shielded

bend relief
0 = without
1 = with

ACC SERIES

AccIS100, AccIS100 dynamic, AccIS102, AccIS102 dynamic

AccIS 100 S- A M1-

series name

axes
100 = one axis
102 = two axes

performance
S = standard
D = dynamic

interface
A = analogue / RS485
C = CANopen

connection
M1 = plug M12
C1 = cable length 2 m
C2 = cable length 5 m
C3 = cable length 10 m

AccSENS103

AccSENS103- A M1

series name

interface
A = analogue / RS485
C = CANopen

connection
M1 = plug M12
C1 = cable length 2 m
C2 = cable length 5 m
C3 = cable length 10 m

Angular rate sensors

measure curve drive for more safety

in railway transportation

In order to achieve an effective cooperation of automated systems and machines it is essential to know important technical vital data. Next to acceleration and inclination, the angular rate plays an important role. It states the speed of an object rotating around a certain axis which is a trigger factor for predictive maintenance, safety and condition monitoring.

Our sensors use **MEMS-gyroscopes** to detect rotary motion at high accuracy and high temperature stability at the same time.

Benefits of monitoring rotation speed

- *Use the value to feed a driver assistance system, e.g. to detect when the end of a long train has left a curve and is on a straight way.*
- *Survey tracks and calculate the curve radius:* $r = \frac{v}{\omega}$
- *Count curve directions to draw conclusions on abrasion on a vehicle's wheelset.*

EN 50155

ANALOGUE

CoriSENS

Analogue angular velocity sensor for railway applications

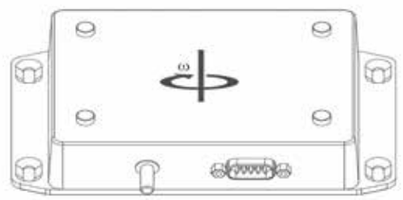

CoriSENS uses the measurement principle of a gyroscope. It detects angular movement by sensing coriolis forces. A micro-mechanical spring-mass-system continuously measures the rotation rate and converts the value into an analogue current or voltage output signal.

CoriSENS features an internal offset-compensation. It minimizes the natural drift effect of the gyroscope by applying a lowpass filter with a very long time constant. The arrangement of the circuit thereby eliminates temperature drift and other static offsets of the gyroscope signal.

$r = \frac{v}{\omega}$

- v → *Velocity v out of the vehicle's tachometer*
- ω → *Angular velocity ω out of* ***CoriSENS***

General characteristics

- *Measurement range ± 12°/s*
- *Current output 4 – 20 mA*
- *Voltage output 0 – 10 V*
- *Die-cast aluminum housing protection class IP42*
- *Operating Temperature range -40°C up to +85°C*

Applications

- *Detection of angular rates, e.g. in vehicles*
- *Predictive maintenance*
- *Monitoring of a vehicle's operation or of a track*
- *Backward calculation of curve radius*

Advantages

- *Conform to EN 50155*
- *Ready to use with on-board power supply of trains (110 V or 24 V)*
- *High temperature stability*
- *Compensation of gyroscope drift*

SOFTWARE

Benefit from our sensor and software intelligence.

We make sensors smart.

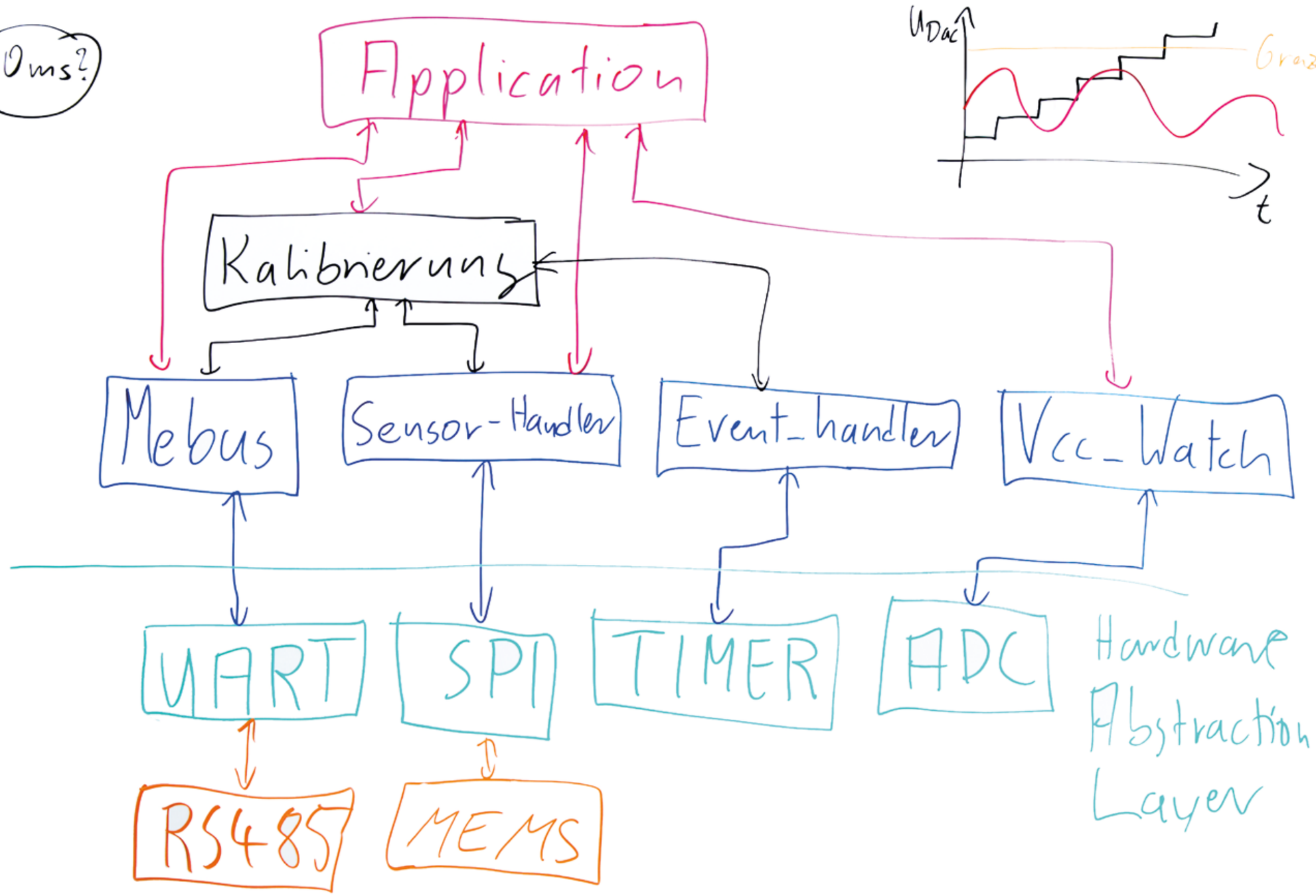

µSensTOOL

A universal configuration software for all sensors – that´s the idea of µSensTOOL

µSensTOOL is Micro-Sensor's configuration software tool that simplifies the handling with all our sensors. It is now possible to start out measurements instantly with an easy to use GUI. Easy access to all the features of the sensor, immediate start of measurement and visualisation of the data, configuration, save and recording functions.

Evaluation and testing without any extra preparation. The visualization of the measured data and the easy configuration dialog enables the user to find the right sensor settings with low effort. The sensor settings, e.g filter parameters or measurement range, are saved permanently on the sensor and can additionally be exported in a file to be used for further sensors as well.

There are specific views and graphs available, depending on the sensor type connected to **µSensTOOL**. For example, a frequency spectrum analysis for the accelerometer AccSENS103, helpful in vibration measurement.

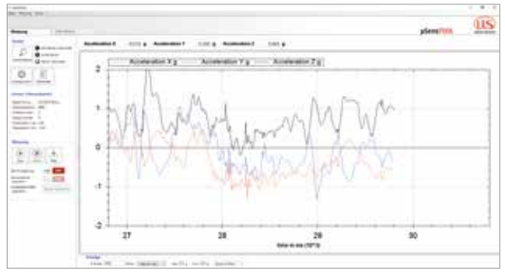

Signal sequence in the software window

Configuration window

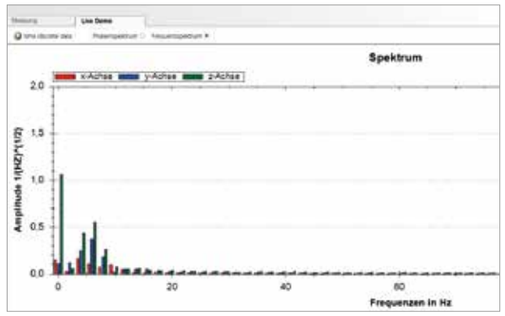

Live Demo window to visualize an oscillation spectrum

MEDAQLib

Sensor high-level interface

BU ...

The integration of the sensors into customer specific software applications is done by using the **MEDAQLib** which is provided by Micro-Epsilon Messtechnik. It can be deployed in combination with a variety of programming languages, e.g. LabView, C++, C#.

MEDAQLib is an application that provides a high level interface for sensors to Windows application programmers. Knowledge about the specific control commands for each sensor is not required in order to be able to communicate with different types of sensors.
Using MEDAQLib, individual sensor commands and parameters to be addressed are set up using general applicable commands and are implemented accordingly in the protocol of the sensor. The program performs the interface configuration of the sensor so that no further effort is required from the user.

Pioneering **SensorFUSION** technology for highly dynamic processes

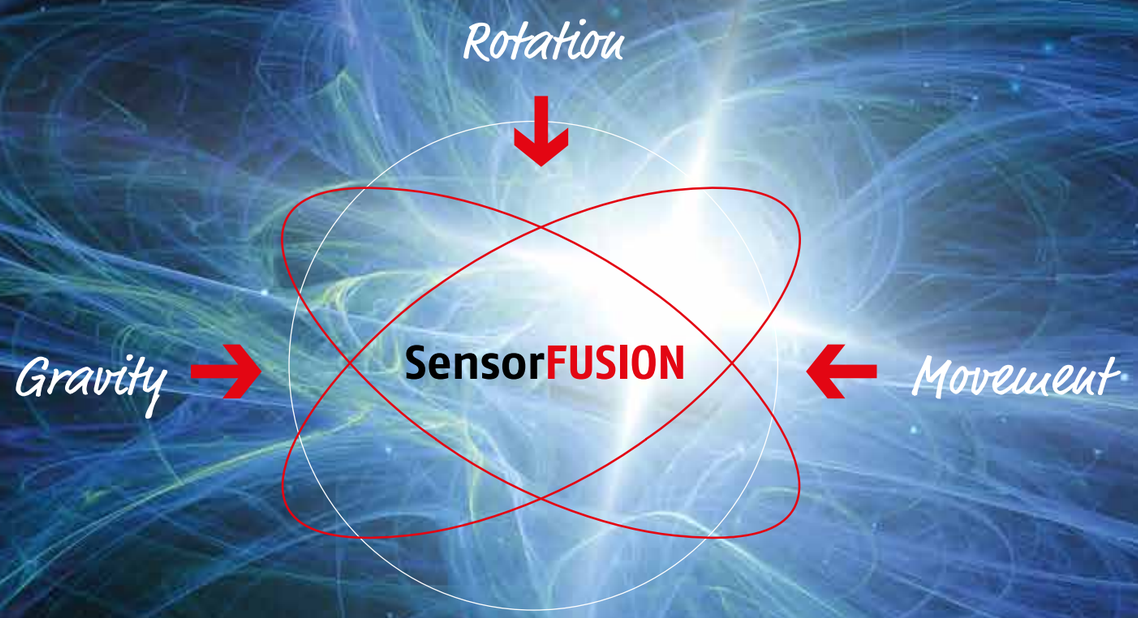

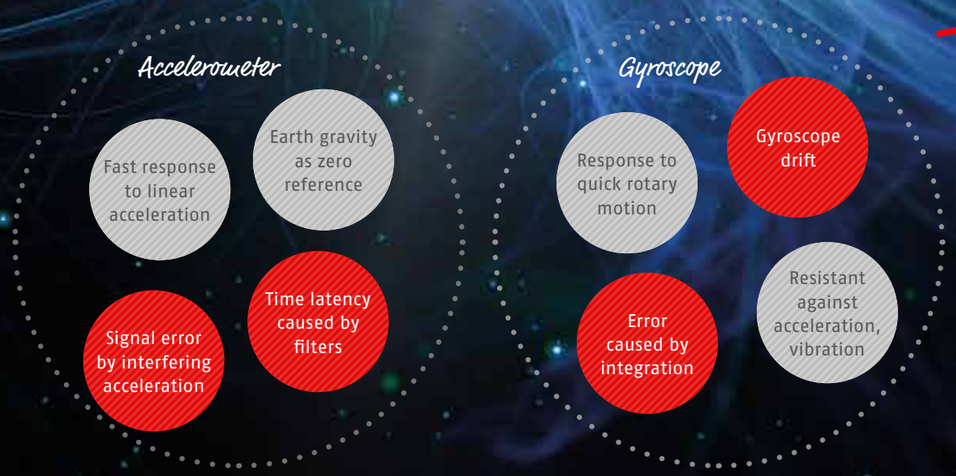

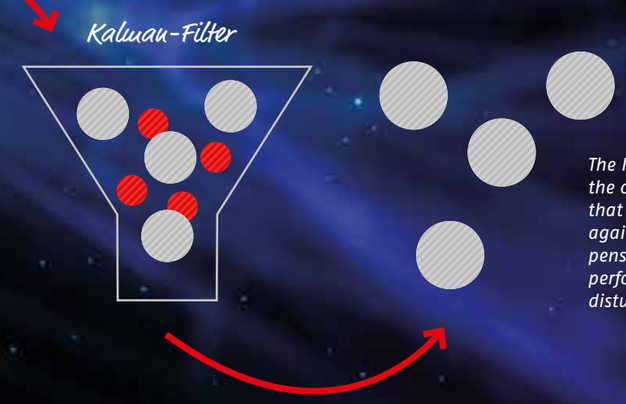

The Kalman algorithm of the **SensorFUSION** *technology merges the output of the accelerometer and the gyroscope in a way that the disadvantages, e.g. the sensitivity of the accelerometer against disturbances and the drift of the gyroscope, are compensated. The advantageous features remain and create a high performance signal by providing immediate response and high disturbance rejection.*

SensorFUSION

In most applications the sensor is exposed to disturbing interferences caused by mechanical vibrations or acceleration forces of moving parts. These effects lower the quality of the sensor signal which is usually addressed by filtering.
Achieving a trade-off between sufficient disturbance suppression and short response time by adjusting the cut-off frequency becomes a challenge due to the decelerating nature of the filter. That effort is avoided by deploying the **SensorFUSION** inclinometer. Its signal characteristics delivers the desired performance without comprehensive testing and evaluation work.

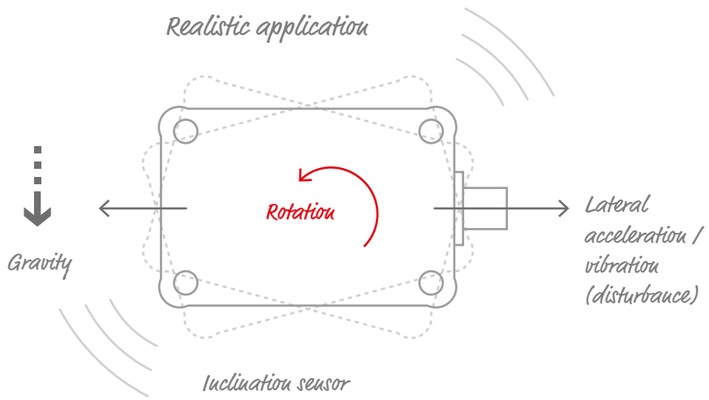

External interference on inclination measurement

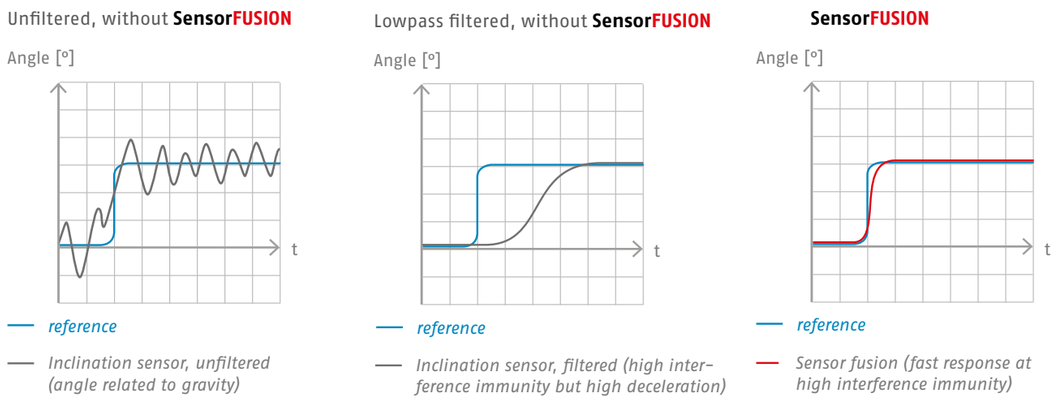

Comparison: different signal types

The graph shows an unfiltered signal of an ordinary inclinometer utilizing an accelerometer to determine the sensor´s position related to earth gravity. The sensitivity of the accelerometer against any kind of vibration and acceleration forces leads to a highly volatile output signal which does not correspond to the inclination angle of the sensor.

Filtering of the signal reduces undesired fluctuations but leads to a remarkably delayed response to changes of the sensor´s inclination angle. The higher the disturbance suppression capability of the filter the higher the delay. If a fast response time is needed in the application then a trade-off has to be found, i.e. an evaluation has to be performed to determine the acceptable level of disturbances and the maximum allowed delay.

The **SensorFUSION** *inclinometer avoids the need of a trade-off between fast response and high disturbance suppression because the sensor signal provides both simultaneously. The graph shows an immediate reaction of the output signal to a change of the sensor´s inclination angle. Undesired fluctuations of the signal are highly suppressed by taking advantage of the immunity against interferences of the angular rate sensor element.*

SensorFUSION at the example of Accis100 dynamic

The **SensorFUSION** filter overcomes the significant delay of the sensor response when using ordinary filtering and provides a similar suppression capability of mechanical disturbances. This functionality is achieved by combining the output of the accelerometer with the signal of an angular rate sensor via advanced Kalman-filter algorithms.

This mechanism takes advantage of the angular rate sensor`s imperviousness to interference and the precision of the accelerometer. The output signal of the **SensorFUSION** filter is an inclination angle which is directly and immediately provided following the sensor's change in orientation.

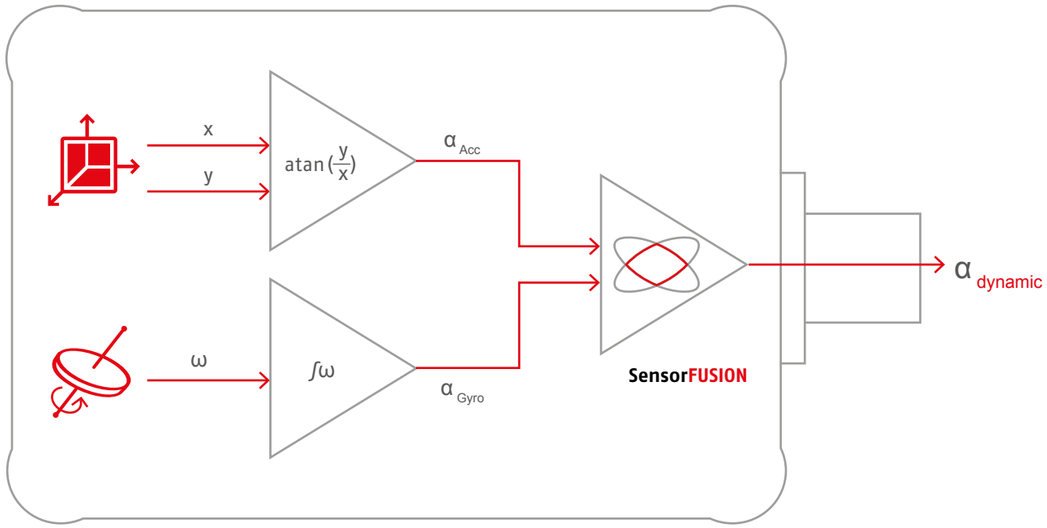

Block diagram of the **SensorFUSION** *algorithm*

The figure above shows the main components of the **SensorFUSION** *inclinometer. The accelerometer measures the position of the earth gravity vector in its two-dimensional system of coordinates, represented by the x and y axis. The result is the inclination angle related to earth gravity found by the tangent operation. That angle value is sensitive against disturbing interferences.*
The gyroscope sensor measures the angular rate, i.e. the rotation rate of the sensor (unit °/s). The sensor's inclination angle can be tracked by integrating the angular rate over time. The result is the inclination angle. That angle value is sensitive against drift effects caused by temperature changes, noise and cumulated integration errors.
That means that none of the two angle values provide a perfect signal itself. But combined, via an advanced Kalman-filter algorithm, the disadvantages of both measurement principles are compensated. The user benefits from the resulting merged signal which offers unexpected opportunities in the field of inclination measurement.

Ruggedness meets precision:

application of high performance sensors

Inclination measurement

Inclination measurement at the base of MEMS technology always rests on acceleration measurement. To obtain the inclination around one axis, acceleration on two orthogonal axes is required.

By measuring the acceleration along the two axes and by using simple triangulation it is possible to calculate the angle between the sensor's measurement axis and the vector resulting out of the two acceleration values.

$$\alpha = \operatorname{atan}\left(\frac{y}{x}\right)$$

The output signal of the inclination sensor is the respective angle α between earth gravity and the preselected zero level of the sensor.

Typical applications of industrial inclination measurement can be found in the following fields:

- *Stabilization of platforms*
- *Alignment of solar panels*
- *Detection of tool positions in construction or agricultural machines*
- *Prevention of swinging crane loads*
- *Self-stabilizing systems (e.g. segways)*
- *Indirect weight measurement (by measuring the deflection of a lever)*

Even if the carriage of a construction or agricultural machine is not level, linking several sensors with each other offer the possibility to obtain a differential measurement. Thus it is possible to obtain the angle difference between two components.

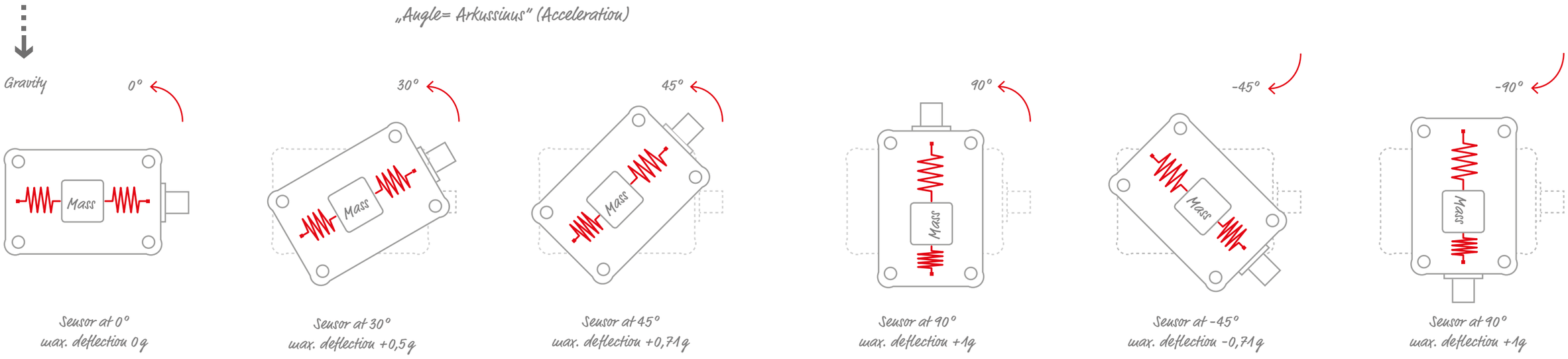

Acceleration in relation to the inclination angle

Inclination sensors for the stability of cranes and plattforms

One important field of application for inclination sensors is construction machinery. Our sensors measure smallest deviations in the position or alignment of crane booms or the correct level of man-carrying mobile platforms. In these applications the sensors serve as safety system on the one side and control technology on the other.
Heavy wind gusts can cause high cranes and working platforms to bend back and forth. Inclination sensors detect the incline caused by external forces and feed security systems to react to the disturbance. Too heavy wind load can also cause the load of a crane to swing uncontrolled on the cable.

With our sophisticated sensor solutions you are able to detect the smallest disturbances in normal operation to initiate a fast counteraction.

Product recommendation

Product	Axes	Measurement principle
AccIS100	1	Inclination out of acceleration
AccIS100 dynamic	1	**SensorFUSION**
AccIS102	2	Inclination out of acceleration
AccIS102 dynamic	2	**SensorFUSION**

Ask our sales team for more information about the sensors and order product samples on www.micro-sensor.com.

Application »Safety for cranes«

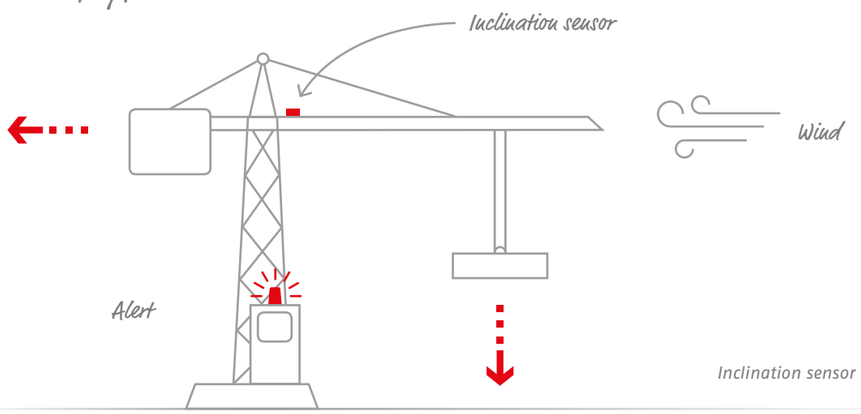

Inclination sensor mounted on crane

Inclination sensors for solar power plants

Modern solar panels follow the direction of the incident solar radiation to achieve optimal yield. Therefore it is necessary to control the alignment of each panel. With our sensors it is possible to equip each panel with a separate sensor. Instead of using solar panels it is also possible to equip mirrors which focus the radiation on a central recipient.

Each of our digital sensors is ready to use in a BUS system with CANopen interface so that they can be integrated into applications with numerous needed measuring devices.

Application »Solar power plant«

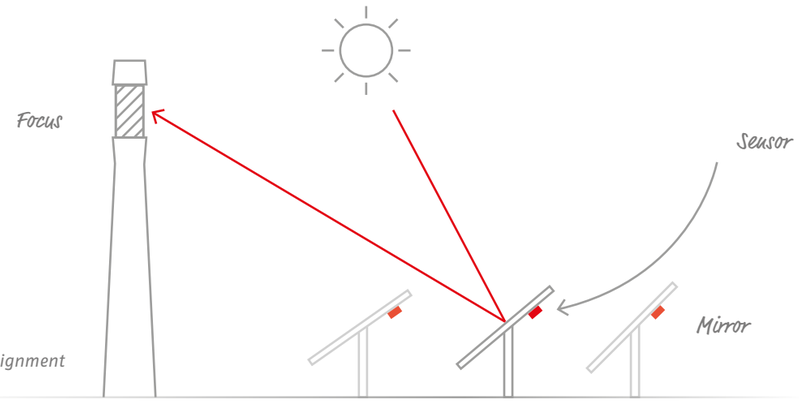

Inclination sensors for the alignment of solar mirrors

Industrial
acceleration measurement

Isaac Newton's three axioms undoubtedly belong to the most fundamental discoveries in physics. Following the first one, an object which is not disposed to any external force will keep its constant state of movement. This leads to the perception that in any case of motion, there is also a force beyond causing acceleration or deceleration.

Micro-Sensor offers a variety of different accelerometers to measure the effects of external forces on objects. With knowledge of the object's mass it is possible to draw conclusions about the effective force. But measuring acceleration is not only important to evaluate acting forces for the determination of the resulting motion. Every time a mechanical system is oscillating, the system is underlying alternating forces.

When vibrations reach the resonance frequency, the system might undergo severe damage. Therefore acceleration sensors provide an effective way to detect any critical vibration and stop systems prior to taking any critical damage.

Micro-Sensor acceleration sensors are sensors measuring acceleration by detecting a capacity displacement in the sensor chip.
We deliver accelerometers in different axis configurations with optional filter settings or even fully customizable with our configuration software **µSensTOOL**.

Agriculture machinery

Product recommendation

Micro-Sensor Acceleration sensors are High-Tech sensors of the AccSERIES. AccTRANS and AccSENS as well as the established economy „BG" products.

Analogue Sensors		Digital Sensors	
BG2168	Industrial sensors	AccSENS103	Industrial sensors
BG2166	Industrial sensors		
AccTRANS4	EN 50155 (Railway)		
AccTRANS+	EN 50155 (Railway)		

Ask our sales team for more information about the sensors and order product samples on www.micro-sensor.com

Application »Agriculture machinery – shock detection«

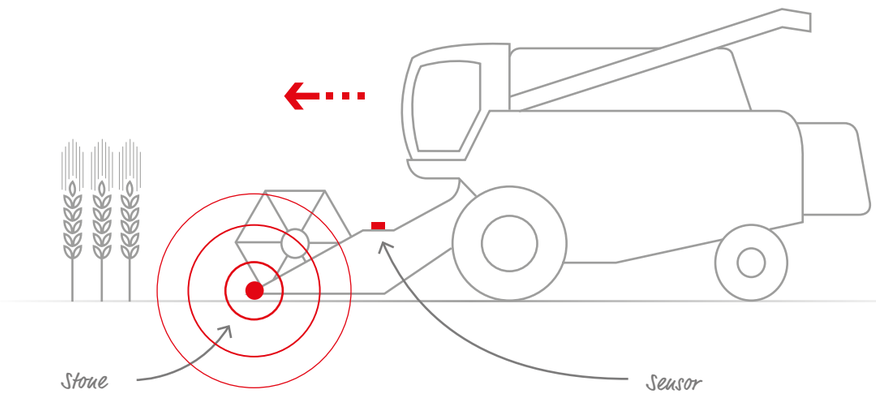

Sensor on mowing unit of harvester to detect stone impacts

Angular rate measurement

Rotary movements play an important role in mechanical systems besides linear motion. From a microscopic to a macroscopic point of view rotation movements are omnipresent. Starting at the level of atoms, there are the smallest particles circling around the nucleus or rotating around their own center. These natural phenomena occur in each size and shape reaching its peak at the level of celestial bodies in space.

Rotation is everywhere. Micro-Sensor makes it measurable by applying latest high-technology sensor chips. Our MEMS-based sensors work like classic gyroscopes. They use the physical effect of a rotating mass which is trying to remain in its position in space, even if it is forced into another direction by external forces.
The force the gyro is exerting against the direction of the distracting movement can be measured directly as angular velocity ω, the speed in degrees per second, at which an object is rotating around a certain axis.

Out of an angular rate it is possible to calculate backwards to obtain a required angle ϕ.

SensorFUSION uses this relation between the calculated angle by integration and the calculated angle by triangulation.

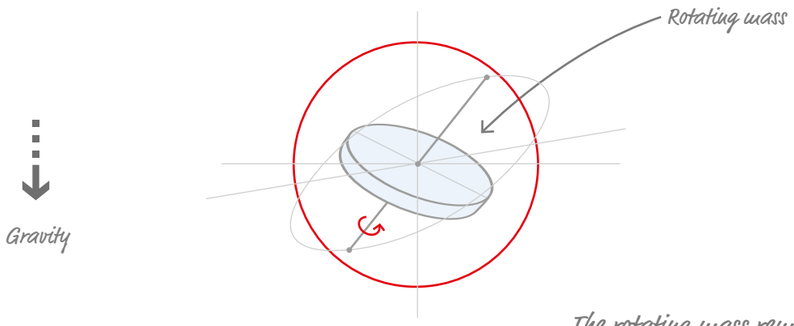

„The rotating mass remains its orientation in space"

Our angular rate sensors do their duty in trains as well as in trams.

Dynamic sensors for curve detection

Application » Rail Curve Sensor «

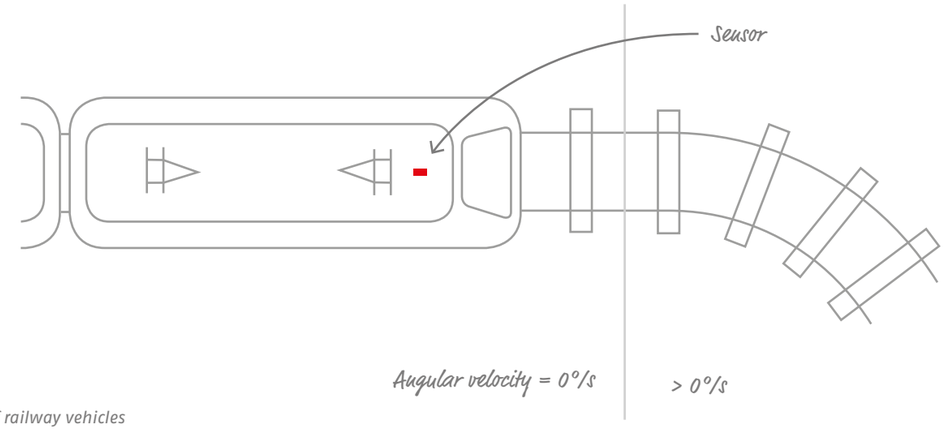

Angular velocity of railway vehicles

Center of excellence for inertial sensors

OEM development

Establishing mutual benefit cooperations with our customers.

Besides standardized products out of this catalog, Micro-Sensor offers also measurement solutions specially designed after our customers' requirements. Our company can look back on successful product development projects together with e.g. manufacturers of railway vehicles or producers of wind turbines.

No matter how your specific requirements are, our experienced team of engineers is ready to find an appropriate measurement solution.
Each of our products leaves plenty room for special adaptions. Particularly our „Economy" line acceleration sensors – the BG-SERIES – is predestined to be customized for your specific parameters after evaluating the required values with the **AccSENS103**.
To obtain optimal results for you, as our partner, and us we provide competent on-site consulting and cooperation on each step of the project.

Our motion lab to test our sensors under translational and rotational accelerations

Micro-Epsilon Group

Competence center „Inertial sensors"

Micro-Sensor is part of the **Micro-Epsilon Group.**
All allied companies belong to Germany's high-tech industry. The Micro-Epsilon Group has specialized in providing the world's latest technology for industrial measurement purposes of any kind.
Over the last years Micro-Sensor at the location in central Germany has become a center of excellence in the field of inertial measuring. With a team of engineers and software developers the company strives to perfect the performance of inertial sensors. We supply international customers with our smart high-tech products made in Germany. Please convince yourself of the outstanding performance, intelligence and quality of our products. We are your reliant partner for intelligent dynamics.

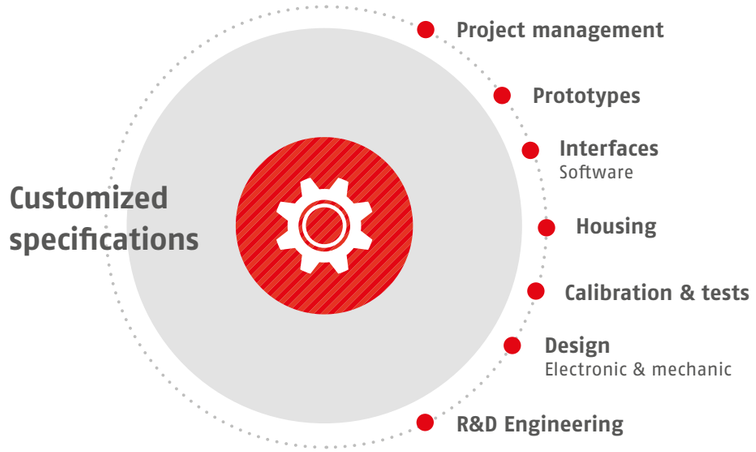

MICRO-SENSOR MICRO-HYBRID MICRO-EPSILON

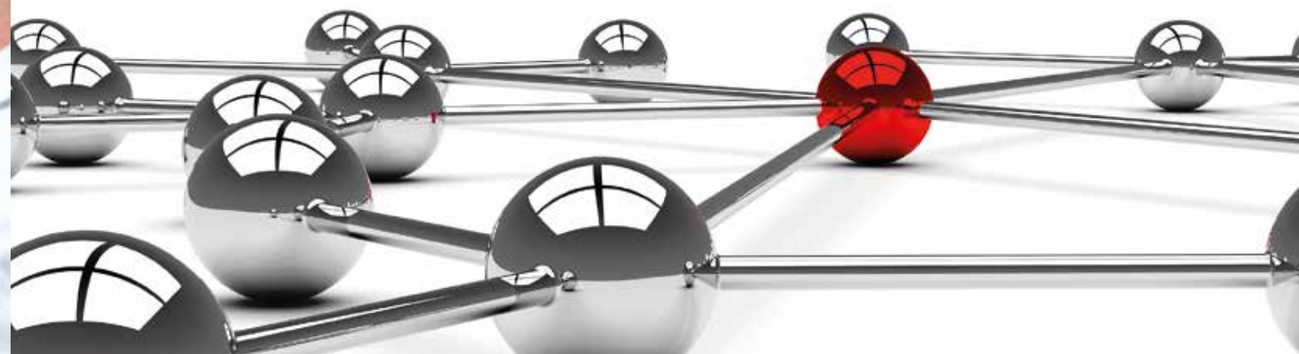

ACCESSORIES

Also see product key on page 21

Connection cables for BG SERIES

Cable length	Number of poles	Shielding	Bend relief
1 m 4 m 10 m 20 m	3 poles 4 poles	Shielded Unshielded	With Without

Connection cables for Acc SERIES

Cable length	Operation
2 m	single modus (with 120 Ohm resistor at sensor side)
2 m	network modus (without 120 Ohm)
5 m	network modus (without 120 Ohm)
10 m	network modus (without 120 Ohm)

STARTER KITS

AccIS100

This product is available as starter kit comprising the sensor, a quick start guide, cable and adapter to connect the sensor to your PC and start configuration right away.

AccIS100 starter kit – 6602.01-8.51

AccIS100 dynamic

This product is available as starter kit comprising the sensor, a quick start guide, cable and adapter to connect the sensor to your PC and start configuration right away.

AccIS100 dynamic starter kit – 6612.01-8.51

AccSENS103

This product is available as starter kit comprising the sensor, a quick start guide, cable and adapter to connect the sensor to your PC and start configuration right away.

AccSENS103 starter kit – 6630.01-8.51

To order the sensor starter kits contact our sales team on www.micro-sensor.com or call +49 36601 592-261

FACTS & FIGURES

SensorFUSION

Developing smart sensors for Intelligent dynamics.

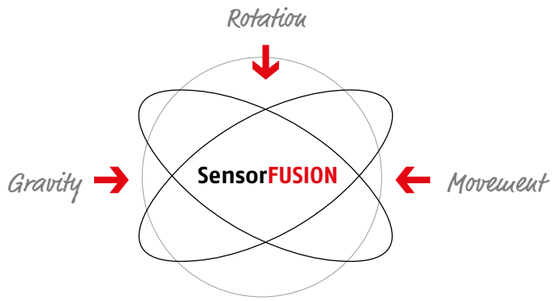

Business segments *(2017)*

Inertial sensors for industrial processes and equipment

Inclination
Acceleration

60 %

Railway sensors

Acceleration
Gyro

40 %

Configuration software

µSensTool

Laboratory

Testing and sensor calibration

- *Climate simulation chamber for temperature tests, calibration, positioning and rotation*
- *High-precision single axis and biaxial rotation measurement systems, measurement of rotation speed and angle*
- *Oscillation and acceleration simulation systems for various requirements (wide frequency range/acceleration range), DAkkS certified measurement system*
- *Measurement log creation*

Micro-Epsilon Group

Competence center „Inertial sensors"

- *Micro-Sensor is the only location dedicated to the development of inertial sensors within the global Micro-Epsilon Group*
- *Customers gain the professionalism and power of a global group combined with uniquely innovative and flexible, fast development performance.*

Benefits

- *Professional supply chain management*
- *Deep value chain*
- *Software development: Community software platforms and interfaces (ME BUS), Bug-free, sophisticated and serially developed software with high functionality and security*

International sales *2016*

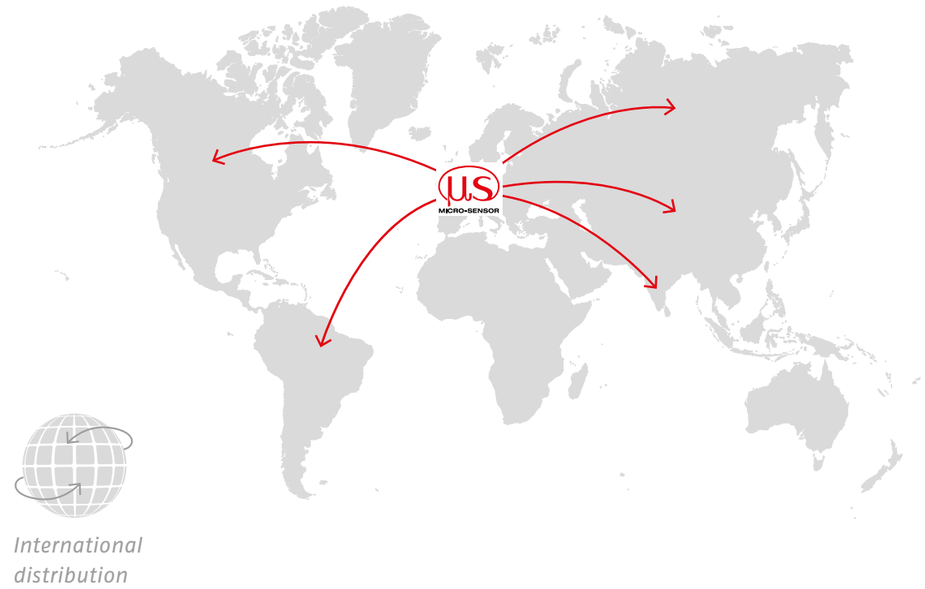

1997
Startup „M+S Mikrotechnik und Sensorik" – Sensor solutions for position, inclination, force

2008
Acceleration sensor **BG2168** *starts in series*

2013
100% integration into the ME company group

2016
First Inertial Measurment Unit (IMU), Release of **µSensTool**

Renamed to „Micro-Sensor"
2012

Digital inclination sensor **AccIS100**
2015

Three axis digital acceleration sensor **AccSENS103**
2017

All technical data are based on simulations and tests and subject to change without notice.

Intelligent dynamics.

MICRO-SENSOR

INERTIAL SENSORS

International Sales

Worldwide availability of product portfolio

Micro-Sensor GmbH
Heinrich-Hertz-Str. 8
07629 Hermsdorf | Germany

T +49 36601 592-0
contact@micro-sensor.com

www.micro-sensor.com