CreaPhys GmbH

Thin Film Deposition, Material Purification and Accessories

Catalog 2015

Table of Contents

Version 2015-06-30

HV and UHV Deposition Systems

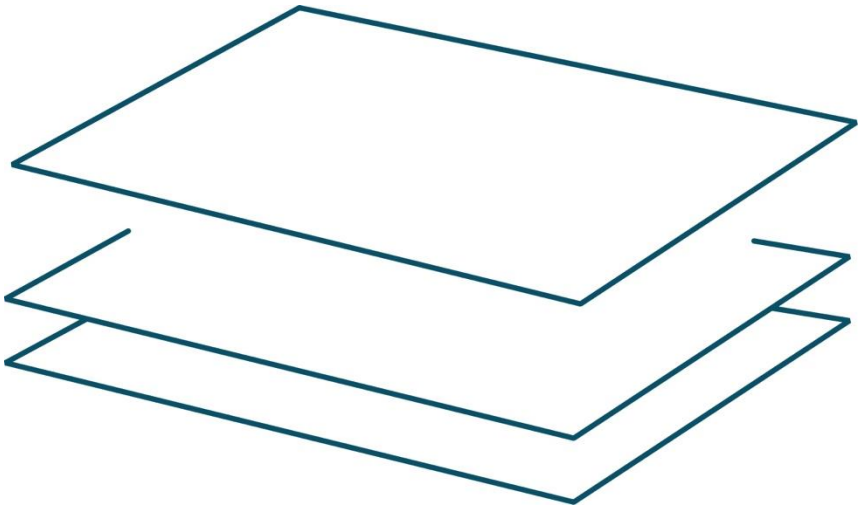

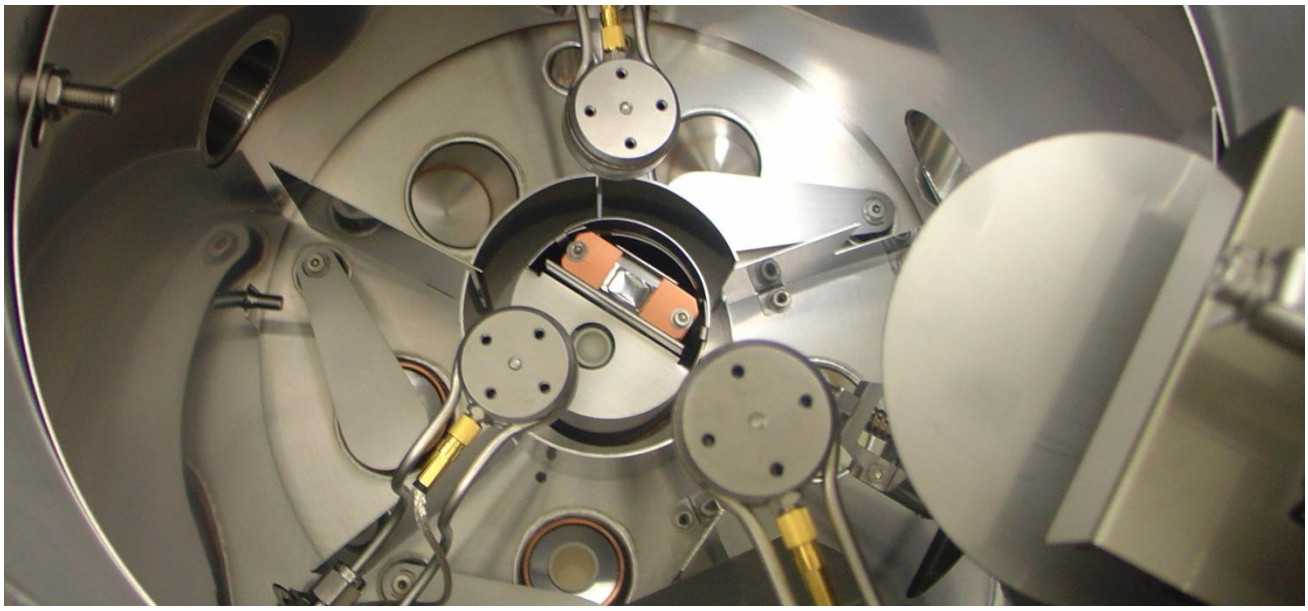

Single Chamber Deposition Systems

Our deposition systems are individually designed for organic electronics and related fields. Based on a large set of established components and years of experience, every system is customized to the unique requirements and individual needs of the customer. While well-proven components guarantee maximum reliability at an affordable price and shorter lead times of our systems, custom parts for special applications can be developed and integrated according to customer requirements. Systems may range from a small single chamber to a complex cluster system (s. page 8).

Technical data

- Substrate sizes up to 200 x 200 mm²
- Base pressure: HV (< 10^{-6} mbar) or UHV (< 10^{-9} mbar)
- Dry pump system
- Equipped for deposition of organics and/or metals
- Transfer systems as needed
- Detailed specifications according to customer needs

Options

- Partly or fully equipped (“ready-to-use”)
- Temperature and rate control
- Substrate heater (up to 500 °C)
- Substrate station incl. masking systems
- Optical or electrical in-situ measurement
- Integration of additional deposition source techniques (e-beam, sputtering, etc.)
- Automated processing
- Multiple co-deposition
- Glove box integration

- ***Components:***
  All our evaporators and components may be integrated in a UHV system but are also sold separately. See page 13 for deposition sources and page 35 for process components.

Deposition System EVAP-x

Our deposition systems of the EVAP-x series are single chamber systems designed to the specific needs of the customer. Every system is designed and equipped to meet the technical and scientific requirements of one or multiple specific applications. However, each system profits from our large inventory of established solutions in the field of thin film deposition, such as the evaporation sources of our DE- or ME-series (s. page 13). Typically our EVAP-systems come ready-to-use with all necessary vacuum, mechanical and electrical equipment (unless otherwise specified by customer).

Base systems	Chamber diameter	Substrate size (max)	Specifications
EVAP-150	150 mm	50 x 50 mm²	Please contact us for your individual layout
EVAP-250	250 mm	100 x 100 mm²	
EVAP-300	300 mm	150 x 150 mm²	
EVAP-400	400 mm	200 x 200 mm²	

Contact us for technical details:

There typically is no “off-the-shelf” solution to any individual problem. Therefore, we take the time to discuss your project with you in detail. Our engineers will share their experience of dozens of similar projects with you to help you find the best solution to your individual problem.

For detailed information and/or technical advice on how to best address your problem please contact us.

- ***Custom modifications:***
  We also modify existing chambers according to your particular needs.

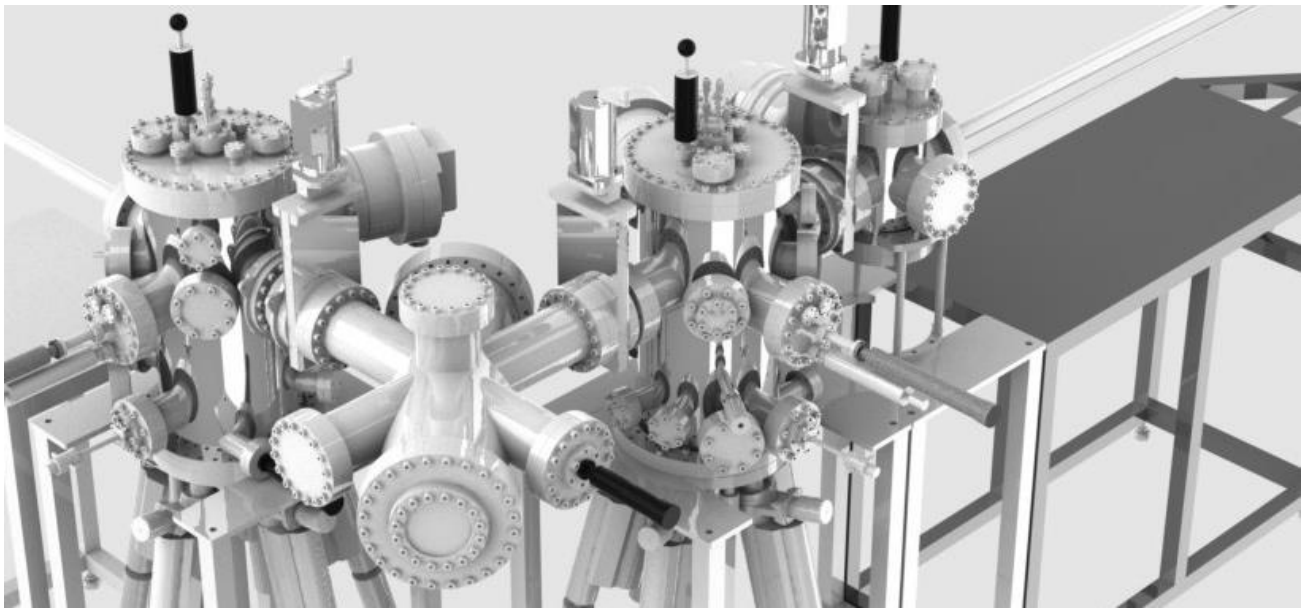

Cluster Deposition Systems

Cluster systems combine a number of chambers with different complementary functionalities.

Technical data

- Substrate sizes up to 200 x 200 mm²
- Base pressure: HV (< 10^{-6} mbar) or UHV (< 10^{-9} mbar)
- Dry pump system
- Equipped for deposition of organics and/or metals
- Transfer systems as needed
- Detailed specifications according to customer needs

Options

- Partly or fully equipped (“ready-to-use”)
- Temperature and rate control
- Substrate heater (up to 500 °C)
- Substrate station incl. masking systems
- Optical or electrical in-situ measurement
- Integration of additional deposition source techniques (e-beam, sputtering, ALD, CVD etc.)
- Automated processing
- Multiple co-deposition

- ***Make use of our expertise:***
  Please ask our experts for additional ideas or any technical advice on how to best configure your cluster system.

Organic Device Preparation and Analysis Laboratory System

Example: Upgrade solution for bell jar vacuum systems

This system is a highly integrated thin film deposition platform for research applications. It combines deposition from multiple organic and metal sources with in-situ sample testing. All components are motorized and the process can be fully automated. The system is standardly based on a 300 mm bell jar chamber. It is highly modular and has been designed for high vacuum (HV) conditions.
This platform provides a comprehensive but compact solution for automated testing in the field of thin film deposition – in particular for organic, inorganic and metal layer deposition. General applications are organic devices like light emitting diodes (OLED), organic transistors (OFET) as well as organic photovoltaic devices (OPV).

Technical data

- Fully automated sample preparation and testing
- Up to 6 substrates of 25 mm x 25 mm
- Masking station with up to 6 masks
- Wedge tool and substrate shutter
- Up to 10 deposition sources for organics and/or metals (co-deposition possible)
- Temperature controlled measuring station for electrical in-situ characterization
- Open protocol access via PC

Options

- Upgrade of existing systems or fully equipped stand-alone system
- Programmable PLC control
- Recipe based process control
- Optical RGB-measurement of generated light (for TOP or BOTTOM design)
- Illumination (for BOTTOM design)
- Layout as training or educational tool

Custom Designed Systems

In some cases standard cylindrical chambers are not the first choice. Next to our standard single chamber and cluster systems there are a number of different chamber geometries available, which may be used as a base for deposition systems with special requirements.

Rectangular Vacuum Chamber

Rectangular vacuum chambers offer advantages for deposition chambers in terms of usable space. They are also advantageous for certain geometries, e.g., for rectangular gate valves.

Order code: RCV

Technical data

- Sizes starting from 300 x 300 mm² (inside)
- Flanges at customer's option

Options

- Fully or partly equipped with deposition sources (s. page 13) and / or other components (s. page 35)

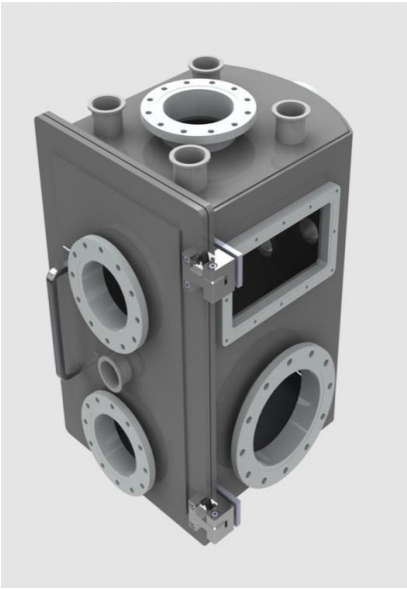

Right: 3D drawing of a rectangular vacuum chamber body.

Bell Jar Vacuum Chambers

Bell jar vacuum chambers are ideal for experimental setups that are often altered or recalibrated and need to be accessible from all sides.

Order code: BVC

Technical data

- 300 mm diameter
- For HV applications (< 10^{-6} mbar)
- Flanges at customer's option

Options

- Fully or partly equipped with deposition sources (s. page 13) and / or other components (s. page 35)
- Retro-fit solutions to existing chambers

Right: 3D drawing of a standard commercially available bell vacuum chamber.

PVD Glove Box Tool

The PVD Glove Box Tool has been designed as an evaporation chamber to be handled inside an inert-gas-box. If the load lock is large enough it can be transferred in and out of a glove box as whole.

Order code: GBT-x

Technical data

- Portable deposition chamber
- Substrate sizes up to 100 x 100 m^2
- Lower ring swings open
- HV regime < 10^{-6} mbar

Options

- Up to six deposition sources (organics or metals, s. page 13)
- Dry pump system

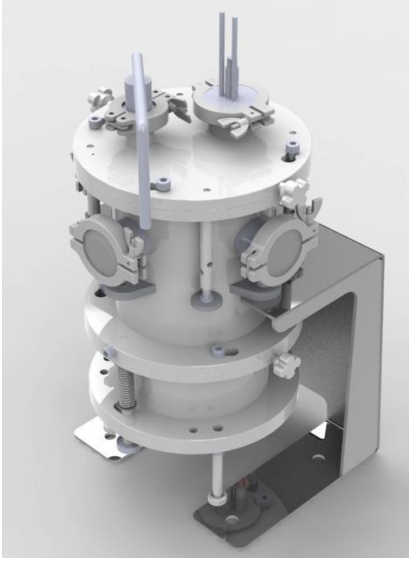

Right: 3D drawing of a PVD Glove Box Tool.

Chamber dimensions		Substrate size	Depos. sources	Order Code
Inner diameter	Outer diameter	(max)	(max)	
100 mm	approx. 175 mm	25 x 25 mm²	3	GBT-100
150 mm	approx. 225 mm	50 x 50 mm²	3	GBT-150
200 mm	approx. 275 mm	75 x 75 mm²	4	GBT-200
250 mm	approx. 325 mm	100 x 100 mm²	6	GBT-250

- ***Random customization:***
  If you have a deposition system that you would like to modify please ask us even if your option is not listed. We have plenty of experience in random customization.

Deposition Sources

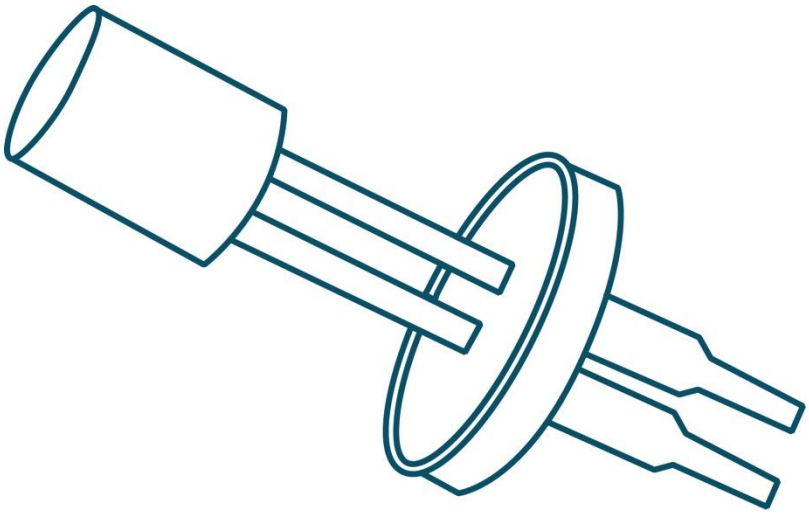

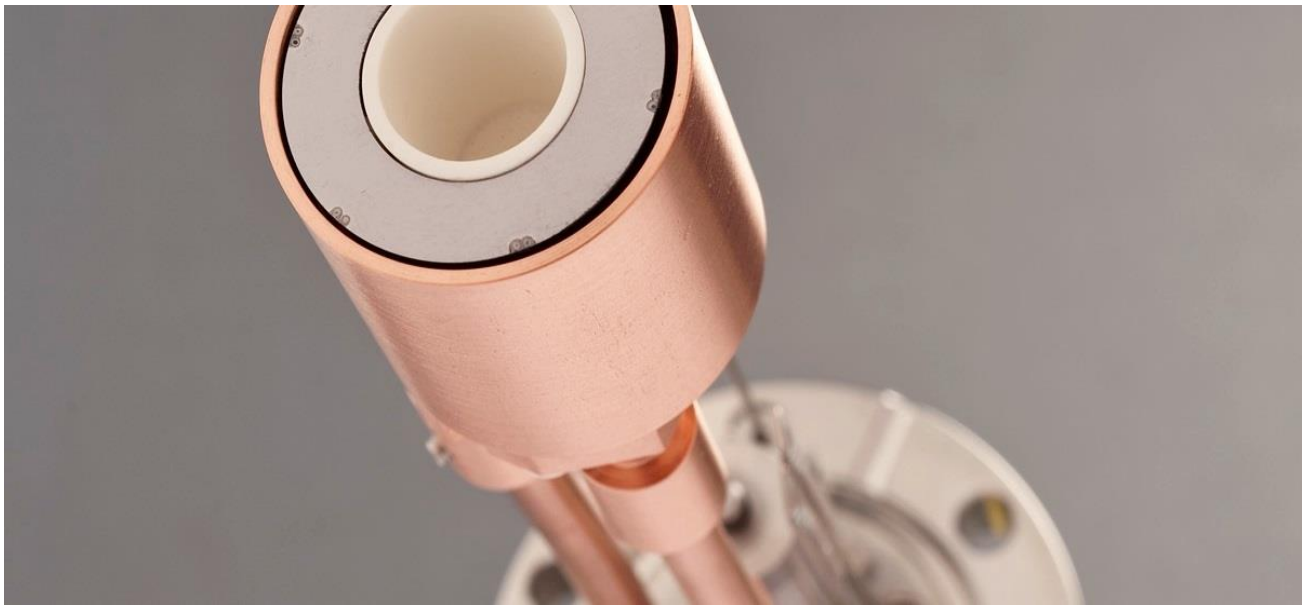

Organic Molecular Evaporators (DE-Series)

Our Organic Molecular Evaporators are designed for use in R&D or small series production and may be applied in high and ultra-high vacuum assemblies. All evaporators feature a wide working range of deposition rates and excellent temperature stability.

We offer evaporators of different size and mounting options. A wide range of crucible options, integrated shutters and additional water cooling. All standard products can be customized on request to fit particular needs.

Technical data

- Typical deposition rates: 10^{-2} ... 50 Å / s (at a throw distance of 150 mm, material dependent)
- Temperature range: 50 °C - 800 °C
- Temperature stability: < 0.1 K
- Thermocouple type K
- Capacities up to 100 ccm

Options

- Different mounting options (CF, ISO-KF, ISO-K…, different flange sizes)
- Crucible: Alumina, conical (standard), further options available (s. page 27)
- Temperature controlled power supply (PID controller)
- Integrated shutter (manual, pneumatic, or electric, s. page 39)
- Water cooling

Single Sources DE-x

Capacity	Dimensions (mm)				Code
(nominal*)	A**	B	C	[size]	
0.5 ccm	100	15.5	46	-0.5	DE-0.5
2 ccm	100	35	42.7	-2	DE-2
4 ccm	110	35	53.7	-4	DE-4
8 ccm	125	35	68.7	-8	DE-8
20 ccm	145	35	90	-20	DE-20
50 ccm*	190	57	135	-50	DE-50

*For conical crucibles, larger with cylindrical crucibles: DE-50 will have a 100 ccm capacity with a cylindrical crucible.
**Minimum in-vacuum length; extension according to customer needs possible.

Flange options:

Flange	[flange]	Code
No flange	-BASE	DE-[size]-BASE
DN40CF*	-CF40*	DE-[size]-CF40
DN40KF*	-KF40	DE-[size]-KF40

*Larger flanges possible. DN16CF or DN16KF flange possible for DE-0.5, DE-50 requires DN63 or larger. ISO-K flanges on request.

Shutter options:

Shutter	[shutter]	Order code
No integrated shutter	-NOS	DE-[size]-[flange]-NOS
Integrated shutter, manual	-SHM	DE-[size]-[flange]-SHM
Integrated shutter, pneumatic*	-SHP	DE-[size]-[flange]-SHP
Integrated shutter, electric*	-SHE	DE-[size]-[flange]-SHE

*Certain shutter options may not be compatible with small flanges. Please ask for details.

Order code example: DE-4-CF40-SHP

An organic molecular evaporator with a capacity of 4 ccm on a DN40CF flange with a pneumatic shutter.

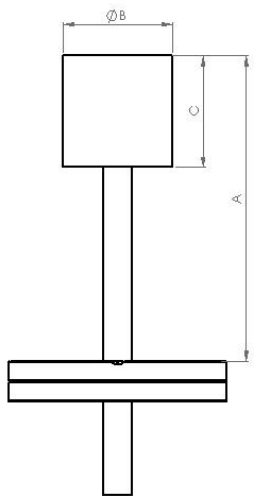

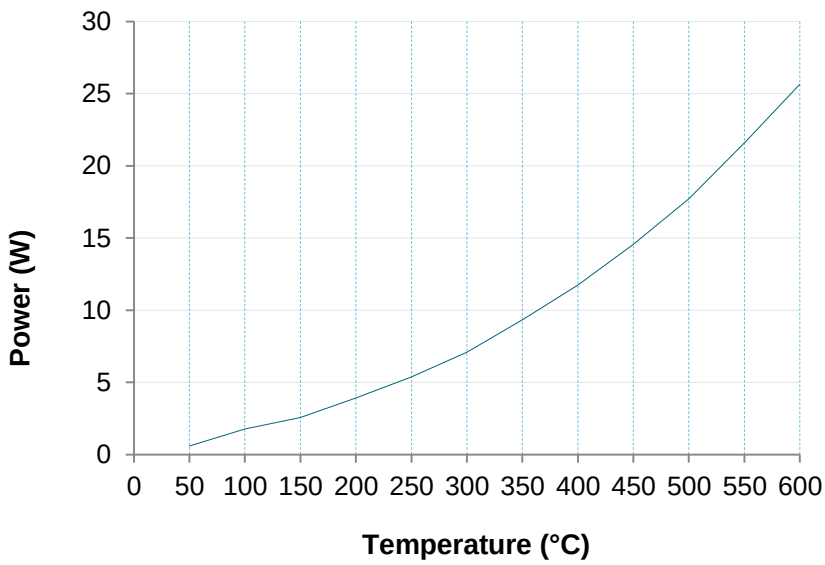

Right: Power consumption.

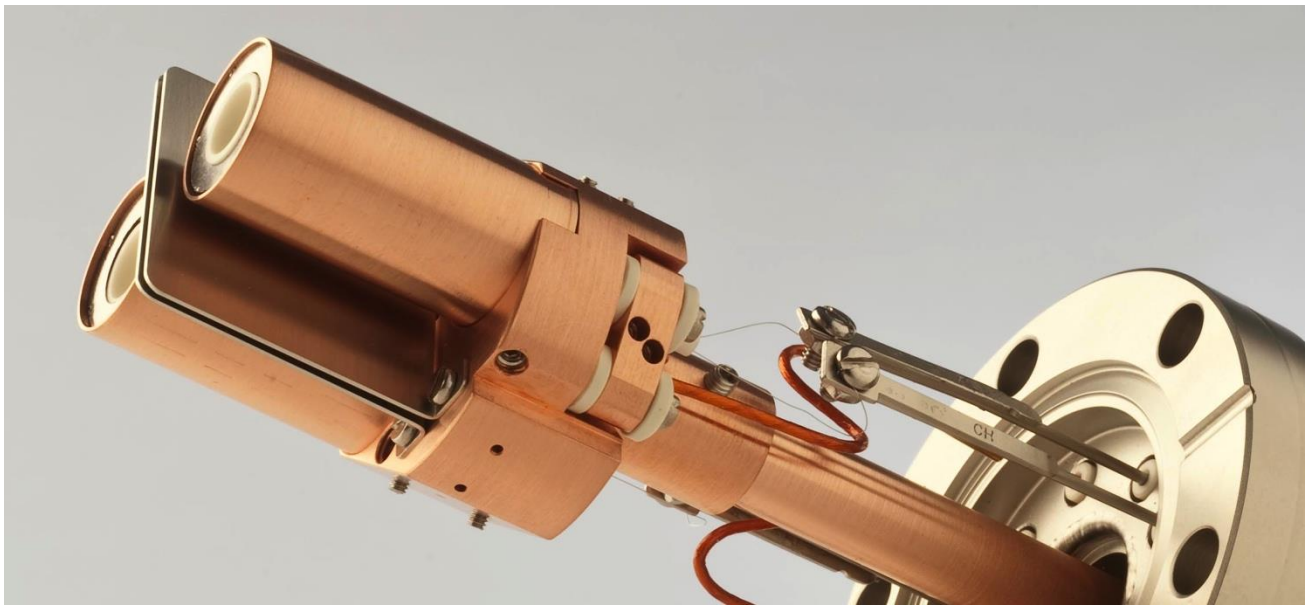

Multiple Organic Molecular Evaporators (DE-Series)

Our Multiple Organic Molecular Evaporators are designed for depositing thin films by means of thermal evaporation. They allow for the evaporation of up to three different materials from a single base plate that may also be installed on a standard flange. Global heat shielding and active water cooling assure excellent temperature stability, thermal separation and, thus, rate control of neighboring sources across the entire specified temperature range.

Technical data

- Typical deposition rates: 10^{-2} ... 10 Å / s (at a throw distance of 150 mm, material dependent)
- Temperature range: 50 °C - 800 °C
- Temperature stability: < 0.1 K
- Thermocouple type K
- Integrated water cooling

Options

- Mounting options: CF, ISO-KF and ISO-K flanges.
- Shutters (s. page 39)
- Crucible: Alumina, conical (standard). Further options available (s. page 27)
- Temperature controlled power supply (PID controller)
- Mini Multi-Source Setup for up to three sources on a CF40 flange
- Special version for horizontal or overhead installation (for DE-DUAL-0.5 only)

Multi-Source Organic Evaporators DE-[multi]-x

Number of sources	[multi]	Code
2	-DUAL	DE-DUAL
3	-TRIPLE	DE-TRIPLE

Source Capacity	Dimensions (mm)		[size]	Order code
(each source, nominal*)	A	B		
2 ccm	35	70	-2	DE-[multi]-2
4 ccm	35	80	-4	DE-[multi]-4
8 ccm	35	95	-8	DE-[multi]-8

*For conical crucibles.

Further options:

Multi-Source Organic Evaporators come on a water-cooled base plate that may be installed on a flange and / or combined with different types of shutters (s. page 39). Without shutters, a three-source evaporator can be fit on a DN100 flange. If you need shutters to be integrated a DN200 is required. Please ask us for details.

Order code example: DE-TRIPLE-8 (compare picture below)

A double organic molecular evaporator with three times 8 ccm capacity on a copper base plate.

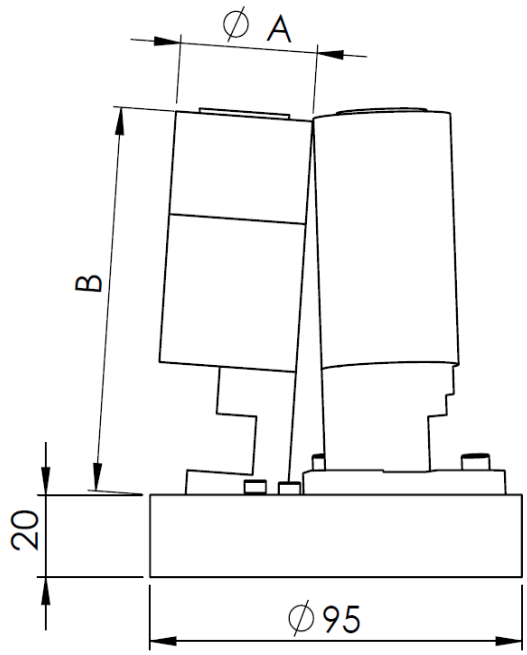

Technical drawing of a DE-TRIPLE-x multiple organic molecular evaporator.

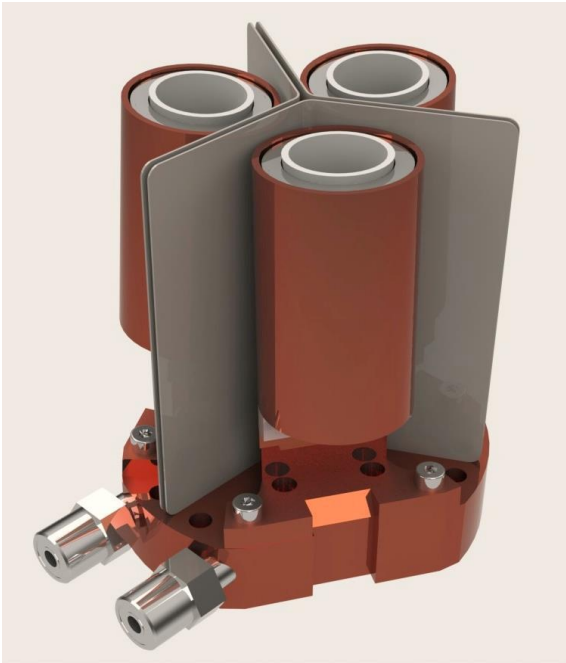

3D drawing of the DE-TRIPLE-8 multi-source evaporator.

- ***Multi-Evaporators with larger capacities***
  Setups with a larger number of organics and/or metal evaporators are designed on request to the specific customer needs. Please refer to our Evaporator Specials (s. page 24) or ask us for details.

Mini Multi-Source Evaporator DE-[multi]-0.5

Our Mini Multi-Source Evaporator is designed for use in setups with little space or limited accessibility. It combines up to three sources on a single DN40 flange.

Number of sources	Capacity*	[multi]	Code
2	0.5 ccm	-DUAL	DE-DUAL-0.5
3	0.5 ccm	-TRIPLE	DE-TRIPLE-0.5

*Nominal capacity for each source

Flange options:

Flange	[flange]	Order code
DN40CF*	-CF40	DE-[multi]-0.5-CF40
DN40KF*	-KF40	DE-[multi]-0.5-KF40

*Larger flanges on request. ISO flanges possible.

Shutter options:

There are different shutter solutions for Multiple Organic Molecular Evaporators, like single or individual shutters (s. page 39). If you need a multiple evaporator with shutter(s) please contact us to discuss the technical details.

Order code example: DE-DUAL-0.5-CF40

A double organic molecular evaporator with two times 0.5 ccm capacity on a DN40CF flange.

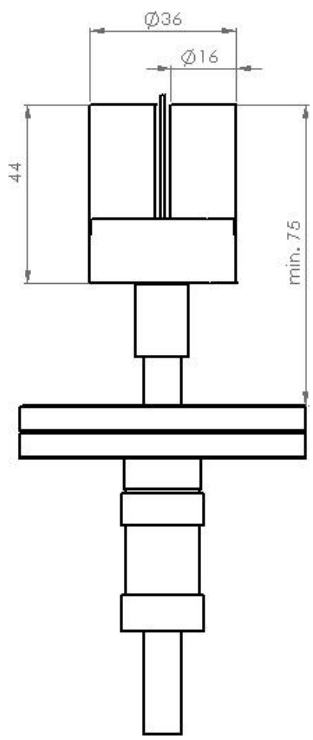

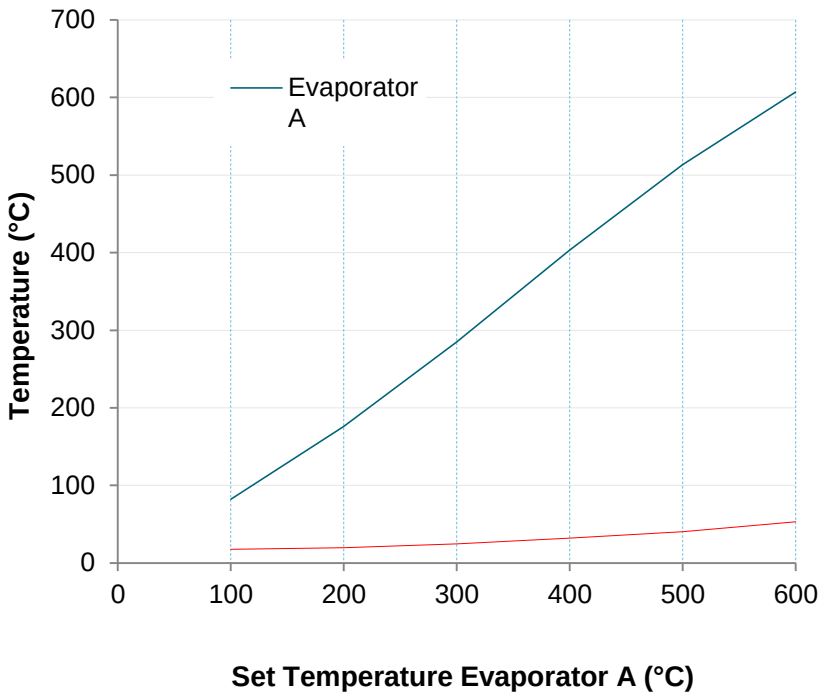

Left: Technical drawing demonstrating the dimensions of a DE-DUAL-0.5-CF40 dual organic molecular evaporator.
Right: Temperature of the two different evaporator units demonstrating thermal separation.

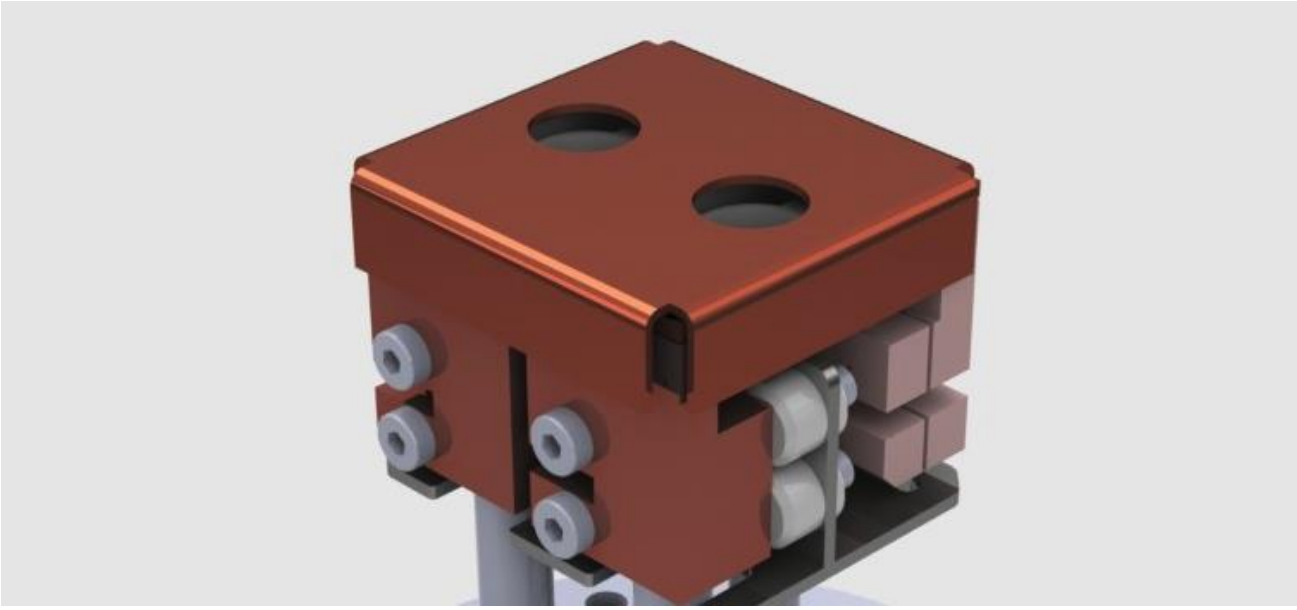

Boat-type Metal Evaporators (MEB-Series)

Our Boat-type Metal Evaporators are designed for use in R&D or small-series production and may be applied in high and ultra-high vacuum assemblies. The evaporator is installed on a water-cooled base plate and maybe mounted on different flange sizes.

CreaPhys offers different types of metal evaporators to cover your individual requirements. Our MEB-Series features the classical boat-type metal evaporators for the use with standard metals such as Au, Ag, Cu, Mg, etc. If you need to evaporate more aggressively melting metals like aluminum or nickel, you should choose our aluminum option.

Technical data

- Temperature range: 300 °C - 1400 °C (up to 1700 °C with the aluminum option)
- Typical deposition rates: 10^{-2} ... 100 Å / s (at a throw distance of 250 mm, material dependent)
- Water-cooled

Options

- Aluminum evaporator option: special ceramic boat and inner shielding especially designed for aluminum evaporation
- Different metal boats (s. page 29)
- Power supply
- Shutter (s. page 39)
- Several different mounting options
- Multiple source assembly (s. page 24)

Boat-type Metal Evaporators MEB-x

Configuration:

Boat capacity	[size]	Code
0.5 ccm	-0.5	MEB-0.5
1 ccm	-1	MEB-1
2 ccm*	-2	MEB-2

*The 2 ccm capacity is only available in combination with the aluminum option.

Flange options:

Flange	[flange]	Code
No flange*	-BASE	MEB-[size]-BASE
DN63CF*	-CF63	MEB-[size]-CF63

*Water cooling not included.
**Larger flanges and ISO flanges available on request.

Aluminum evaporator option:

Aluminum evaporator	[option]	Temperature range	Order code
No		up to 1400 °C	MEB-[size]-[flange]
Yes	-AL	up to 1700 °C	MEB-[size]-[flange]-AL

Order code example: MEB-0.5-CF63-AL

A boat-type metal evaporator with 0.5 ccm capacity on a DN63CF flange that is also suited for aluminum and nickel and endures temperatures up to 1700 °C.

- ***Customized Metal Evaporators:***
  Oftentimes standard equipment may not fit your application or configuration. Please do not hesitate to ask us for customized equipment to perfectly match your needs.

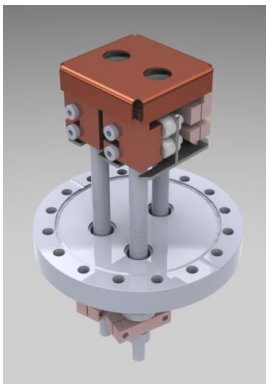
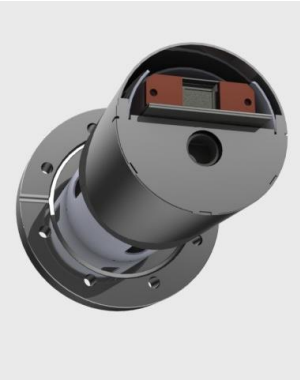
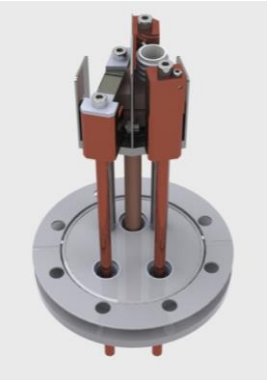


Different examples of customized metal evaporator setups built by CreaPhys. Mounting, configuration and even the evaporator design can be exactly matched to any specific requirements.

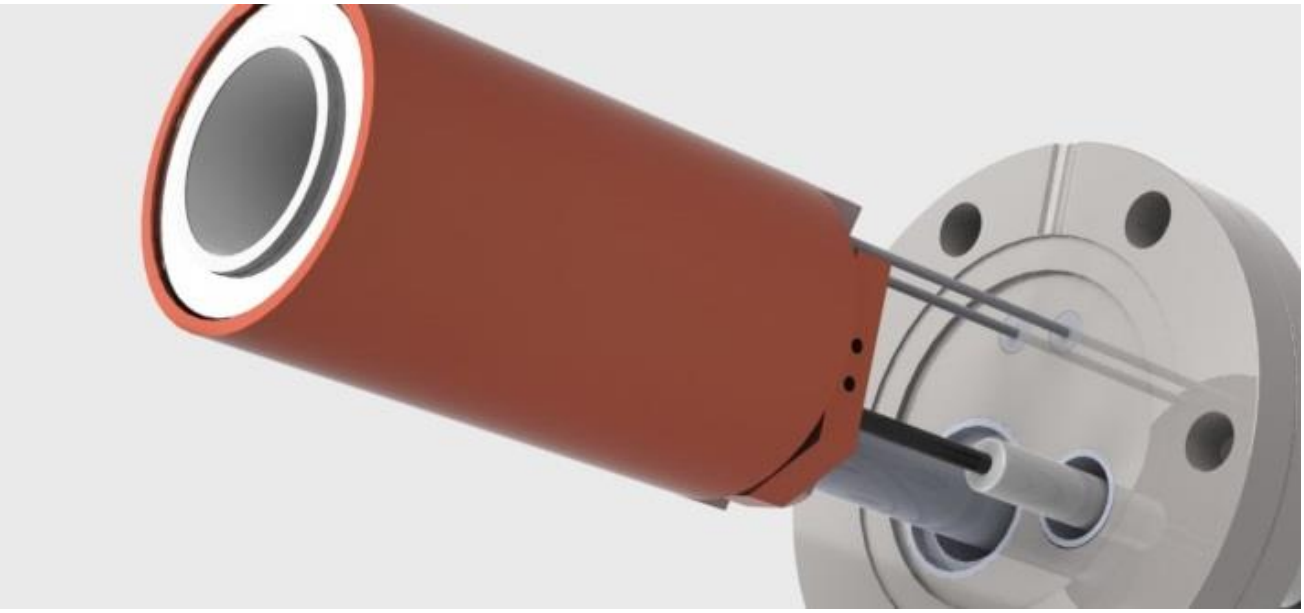

Crucible-type Metal Evaporators (ME-Series)

Our ME-Series features the metal evaporators using standard crucibles (s. page 24). Typical deposition materials include Ag, Mg, Ca, Cu and Au. If you plan to evaporate more aggressive metals - like aluminum - please refer to our MEB-Series with the aluminum option.

Technical data

- Typical deposition rates: 10^{-2} ... 50 Å / s (at a throw distance of 250 mm, material dependent)
- Temperature range: 300 °C - 1400 °C
- Temperature stability of < 0.1 K
- Thermocouple type C
- Tungsten filament with ceramic insulators
- max. 9 A / 350 W (depending on size)
- Water-cooled (approx. 4 liter / min)
- Suitable for Ag, Mg, Ca, Cu and Au

Options

- Flange options: CF flanges. Mounting on other flanges on request.
- Different crucibles (s. page 27)
- Power supply
- Shutter
- PID controller

Crucible-type Metal Evaporators ME-x

Capacity	Dimensions (mm)					Code
(nominal*)	A**	B	C	D	[size]	
4 ccm	110	35	53.7	20	-4	ME-4
8 ccm	125	35	68.7	23	-8	ME-8

*For conical crucibles.
**Minimum in-vacuum length; extension according to customer needs possible.

Flange options:

Flange	[flange]	Code
No flange*	-BASE	ME-[size]-BASE
DN40CF	-CF40	ME-[size]-CF40

*Water cooling not included. Larger flanges on request.

Shutter options:

Shutter	[shutter]	Order code
No integrated shutter	-NOS	ME-[size]-[flange]-NOS
Integrated shutter, manual	-SHM	ME-[size]-[flange]-SHM
Integrated shutter, pneumatic*	-SHP	ME-[size]-[flange]-SHP
Integrated shutter, electric*	-SHE	ME-[size]-[flange]-SHE

*Certain shutter options may not be compatible with small flanges. Please ask for details.

Order code example: ME-8-CF40

A metal evaporator with 8ccm capacity on a DN40CF flange (Compare picture to the left)

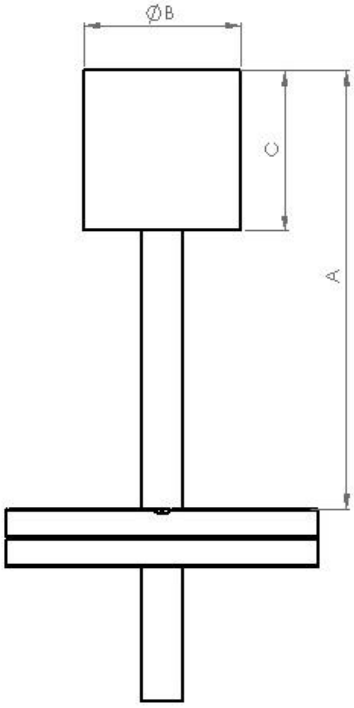

Left: Technical drawing of the ME-Series metal evaporator.
Right: Crucible-type metal evaporator on a DN40CF flange (ME-8-CF40).

- ***Customized Metal Evaporators:***
  As for boat-type metal evaporators customization is possible. Please ask for details.

Evaporator Specials

Multi-Zone Organic Molecular Evaporator

The Multi-Zone Organic Molecular Evaporator is designed for the gentle evaporation process of sensitive materials. The controlled temperature gradient can also be used to avoid clogging of the nozzle. Further, multi-zone evaporators allow for a variety of process tests (cracker cells).

Code: MZE

Technical data

- Multiple thermal zones
- Temperature range: 50 °C - 800 °C
- Temperature gradient up to approx. 400 K
- Capacity of up to 50 ccm
- CF40 flange or larger

Options

- 2 to 5 separately heated zones
- Different crucible sizes for a single layout
- Water cooling
- Shutter (separate)

Example: 3D drawing of a 5-zone organic molecular evaporator.

Multi-Source Assemblies

The Multi-Source-Assemblies are designed for maximum flexibility of deposition processes.

Technical data

- Base ring for up to 16 deposition sources
- Combination of metal and organic source (s. page 13 et seqq.)
- Passive cooling
- Multiple co-deposition

Options

- Active water cooling
- Flip shutters (s. page 39)
- Integration of quartz crystal monitors

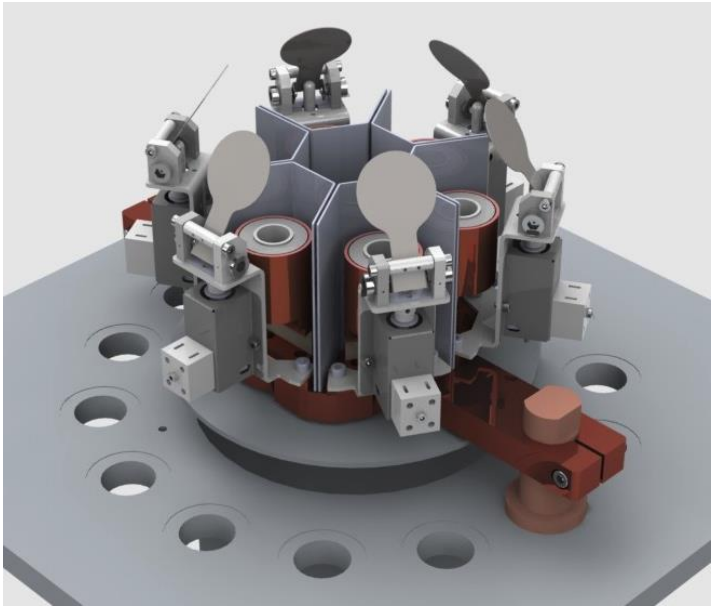

Example: 3D drawing of a multi-source assembly designed to fit a Bell Chamber with 300 mm diameter

- ***Customized multi-source assemblies:***
  We will integrate multiple sources to a specified geometry either on a base plate or within an existing chamber setup. Please ask for details.

Retractable Evaporator Tool

The Retractable Evaporator Tool is designed to allow for the evaporation of sensitive materials, which need to be loaded under an inert gas atmosphere within a glove box. After retracting the evaporator and closing the valve, the evaporator can be installed at the vacuum chamber. The valve will conserve the vacuum and protect sensitive materials.

Order Code: RET

Technical data

- Stroke distance 50 mm - 250 mm
- Max. extension into chamber: up to 210 mm
- For organic sources (DE-Series)

Options

- Separate pumping / venting flange
- Larger / different flanges possible

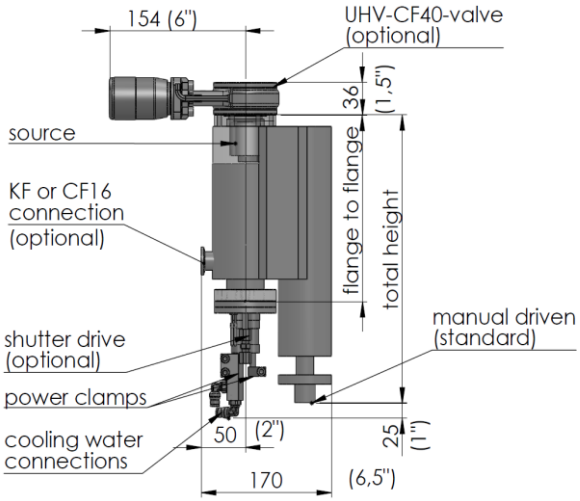

Right: Scheme and dimensions of a retractable evaporator with valve.

Stroke options:

Stroke length (mm)	Total height (mm)	Flange to flange (mm)	[stroke]	Code
50	212.5	75 – 125	-50	RET-50
100	270.5	83 – 183	-100	RET-100
150	328.5	91 – 241	-150	RET-150
200	386.5	99 – 299	-200	RET-200
250	444.5	107 - 357	-250	RET-250

Flange options:

Evaporator	[flange]	Code
DN40CF	-CF40	RET-[stroke]-CF40
DN40KF	-KF40	RET-[stroke]-KF40

* larger flanges on request

Valve options:

Valve	[valve]	Order code
Yes	-V	RET-[stroke]-[flange]-V
No	-NO	RET-[stroke]-[flange]-NO

* larger flanges on request

Order code example: RET-150-CF40-V

A Retractable Evaporator Tool with a stroke distance of 150 mm on a DN40CF flange and valve.

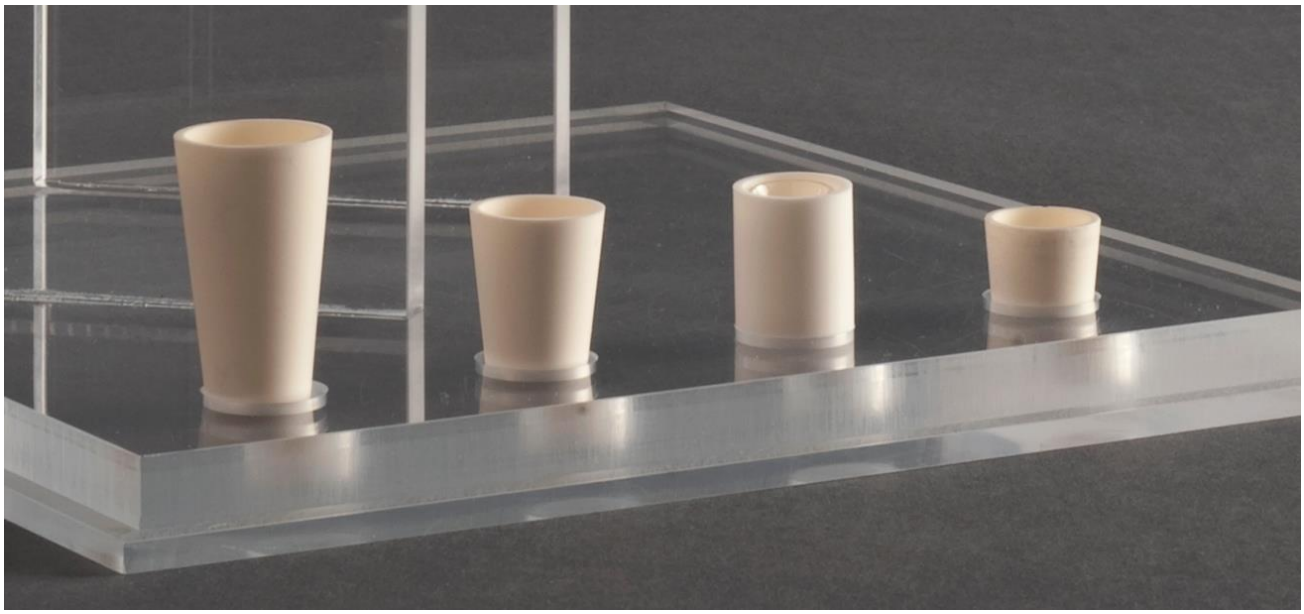

Accessories: Crucibles & Boats

The crucible or boat, holding the evaporation material, is literally at the core of the evaporation process. Several different materials and shapes are available to cover your individual needs. While the choice of the crucible can be critical for non-standard applications, a conical Al_2O_3 crucible will do in most cases. If you are not sure about the requirements of your particular application, please do not hesitate to contact us. Our experienced technical staff will guide you through your options to find the crucible that will yield the best results for your individual application.

Technical data

For crucibles:

- Conical shape for optimal evaporation characteristics (others on request)
- Chemically inert to deposition materials
- High thermal conductivity to ensure low material degradation

For boats:

- Material, shape and size depending on application

Options

For crucibles:

- Different shapes
- Various different materials
- Special ceramics for aluminum evaporation
- Apertures

For boats:

- Shape as needed
- Different metals
- Special ceramics for aluminum evaporation

Crucibles

Our crucibles are designed to go hand-in-hand with our evaporators of the DE- and ME-Series. All our crucibles are conical in shape to guarantee ideal deposition characteristics. Cylindrical shapes as well as crucibles with apertures are available on request.

Capacity	Dimensions (mm)				Made for
(nominal*)	OD	ID	H (in/out)	[size]	
0.5 ccm	9	7	16 / 24	-0.5	DE-[multi]-0.5
2 ccm	18	15	18 / 22	-2	DE-2
4 ccm	20	17	28 /32	-4	DE-4, ME-4
8 ccm	23	20	43 / 47	-8	DE-8, ME-8

*Maximum filling level for operation is 2/3 of the nominal value.

Material	[material]	Order code
Al_2O_3	-ALO	CRU-[size]-ALO
AlN	-ALN	CRU-[size]-ALN
High-density BN	-HDBN	CRU-[size]-HDBN
Graphite	-GR	CRU-[size]-GR
Stainless steel	-SS	CRU-[size]-SS
Tantalum	-TA	CRU-[size]-TA
Molybdenum	-MO	CRU-[size]-MO
SiC	-SIC	CRU-[size]-SIC
Titanium	-TI	CRU-[size]-TI
Vitreous carbon	-VC	CRU-[size]-VC
Special ceramic*	-ZZ	CRU-[size]-ZZ

*Required for metal evaporators with –AL option for aluminium.

Optional:	[option]	Order code
Additional quartz inset	-Q	CRU-[size]-[material]-Q
Different shapes	Standard: conical. Please ask for differently shaped crucibles or for other features like apertures.	

Order code example: CRU-4-HDBN

A conical crucible with a capacity of 4 ccm made from high-density boron nitride.

- ***Custom products:***
  Please ask us for any special requirements that you may not find covered in our list.

Metal Boats BO-x

The boat holds the evaporation material in classical (boat-type) metal evaporators. For rather benign materials such as Au, Ag, Cu, Mg, and others these boats can be made from heat resistant metals like tantalum or tungsten.

For metals that are more aggressive when melting, in particular aluminum, a special ceramic has to be used (s. next page).

Metal Boats BO-x

Capacity (nominal*)	[size]	Code
0.5 ccm	-0.5	BO-0.5
1 ccm	-1	BO-1
2 ccm	-2	BO-2

*Maximum filling level for operation is 2/3 of the nominal value.

Material	T_{max} (°C)	I_{max} (A)	[material]	Order code
Molybdenum	1400	86	-MO	BO-[size]-MO
Tantalum	1600	100	-TA	BO-[size]-TA
Tungsten	1800	140	-W	BO-[size]-W

- ***Several shapes available:***
  Please specify the shape / the dimensions you need alongside with your order.

Ceramic Heater CH-x

For the evaporation of aluminum or other aggressive metals like nickel a combination of a ceramic boat and a crucible inset is used. This combination replaces the classical metal boat within the metal evaporator to guarantee stability against aggressive metals at very high temperatures. Our Ceramic Heaters are compatible with more benign metals.

Ceramic Boat Options

Capacity	Dimensions (mm)					Code
(nominal*)	A	B	C	D	E	
0.5 ccm	20.4	50	65	12	6	CH-S
1 or 2 ccm	20.4	50	65	18	6	CH-M

*Maximum filling level for operation is 2/3 of the nominal value.

Crucible Options

Crucible	Dimensions (mm)		[crucible]	Order code
(nominal*)	OD	Height		
0.5 ccm	12	6	-0.5	CH-S-0.5
1 ccm	18	6	-1	CH-M-1
2 ccm	18	10	-2	CH-M-2

*Maximum filling level for operation is 2/3 of the nominal value.

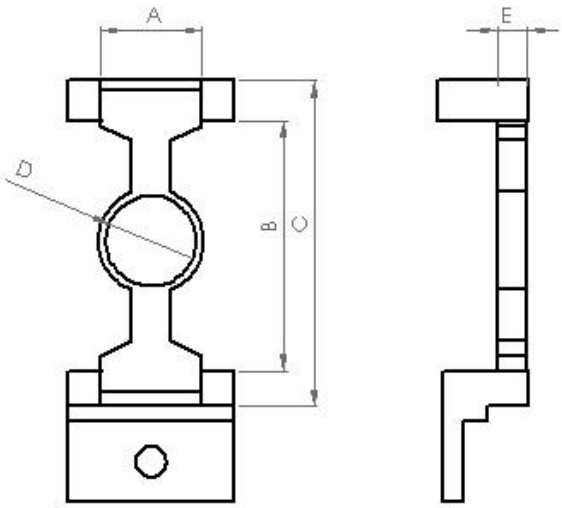

Technical drawing

- ***Custom fabrication:***
  We also fabricate boats with custom measures according to individual needs. Please contact us.

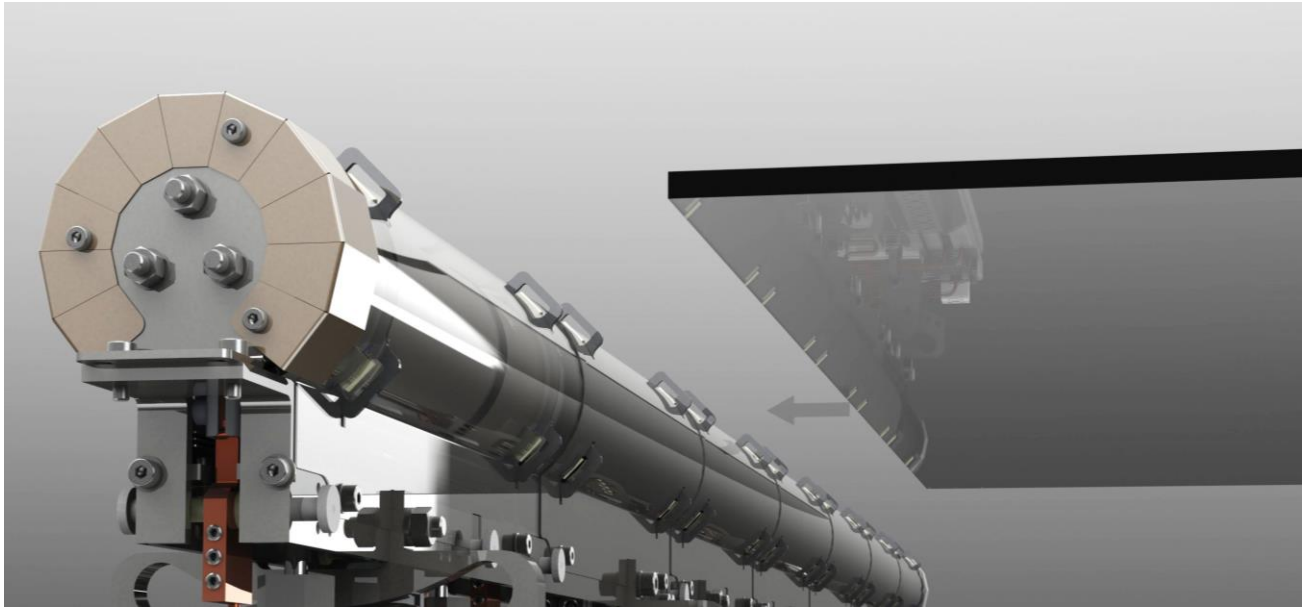

Linear Evaporation Sources

Our linear evaporation sources are engineered for production processes of organic electronic devices. Their compact design and their ease of operation make them a versatile tool for new or existing production lines. They feature high cross uniformity and long-term rate stability. Due to our scalable technology these linear evaporators can be used for substrate widths ranging from 400 mm (GEN2) to 1200 mm (GEN5) and beyond.

Technical data

- Deposition width 400 mm to 1200 mm (GEN2 to GEN5, larger on request)
- Deposition rates: 0.1 - 200 nm*m / min
- Up to 800 °C
- Rate stabilization for long-term operation
- Patented innovative evaporator design for high rates at lower temperatures
- Directly heated ceramic tube for optimal temperature uniformity
- Bottom-up, top-down, or vertical assembly

Options

- Inert loading
- Static reservoir as needed or feeding mechanism for continuous operation
- Rotatable frame
- Temperature-rate-controller
- Shutter

- ***Detailed information:***
  Please contact us for further information and with any question you may have.

Example: Performance data GEN3 Linear Evaporator

CreaPhys linear evaporators combine excellent deposition uniformity with long-term rate stability. Sources can be operated at low or high rates without affecting the deposition characteristics. During long uptimes the temperature is adjusted in order to keep the rate constant. The data below was collected with Alq_3.

Performance data

- Deposition width 600 mm
- Uniformity ± 1%
- Material yield > 55%

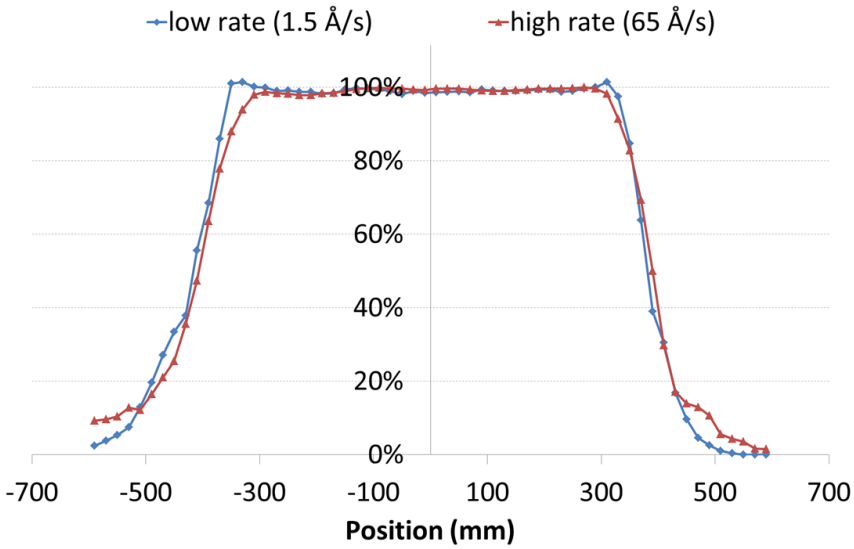

Normalized film thickness of a GEN3 Linear Evaporator for a deposition width of 600 mm at two different rates.

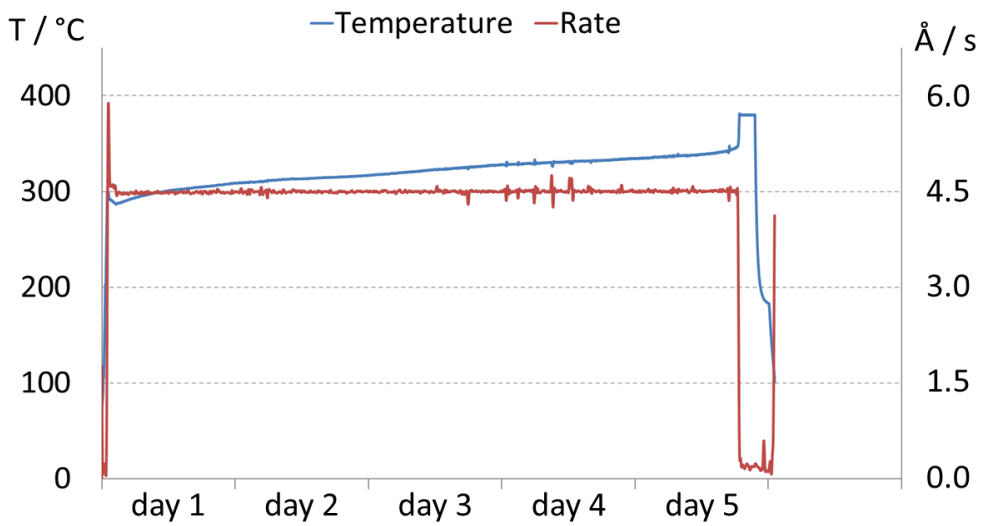

Deposition rate and temperature over time for the long-term operation of a GEN3 Linear Evaporator. The temperature is adjusted automatically in order to keep the rate constant.

Components

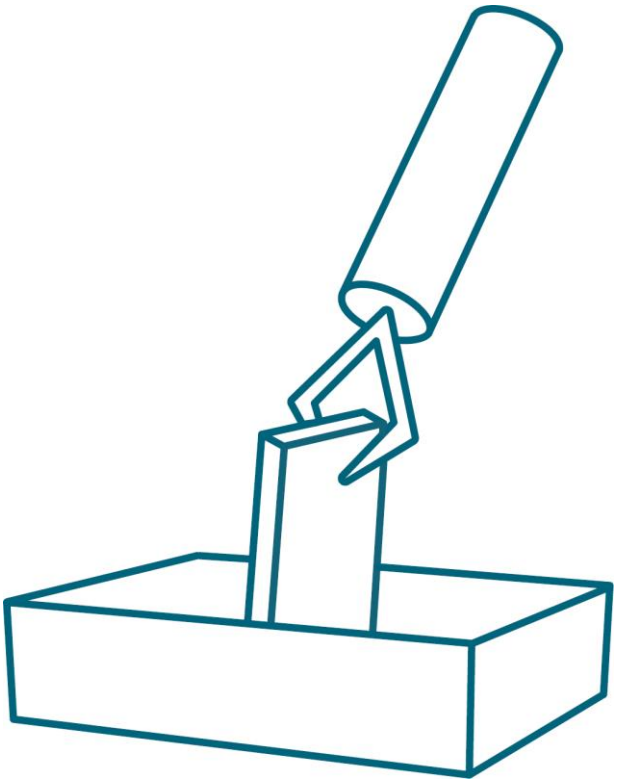

Process Components

Wobble-Stick

The wobble-stick is designed for manipulations inside vacuum systems without breaking the vacuum level, e.g., the material transfer from in-vacuum reservoirs to evaporator sources.

Order code: WOB

Technical data

- Typical stroke length: up to 250 mm
- Manipulation angle: up to 20°
- UHV compatible (bakeable up to 200 °C)
- DN40CF flange

Options

- Different pincers
- Matching in-vacuum material reservoir (see below)
- Larger flanges

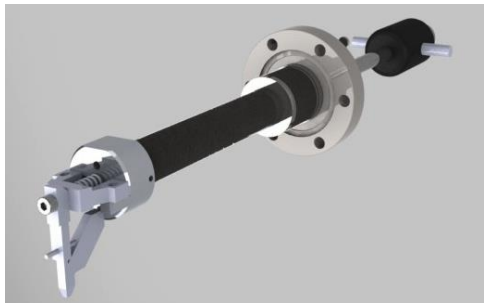

Example: 3D drawing of a wobble-stick with a stroke length of 100 mm.

In-Vacuum Material Reservoir

The In-Vacuum Material Reservoir is designed to hold material recipients for in-vacuum refills or material changes.

Order code: VMR

Technical data

- Up 5 material recipients
- Slidable material sled
- Bar length at customer's option
- DN40CF flange
- Complemental to wobblestick (see above)

Options

- Linear feedthrough to move sled (standard: movable with wobblestick)
- Retractable
- Larger flanges

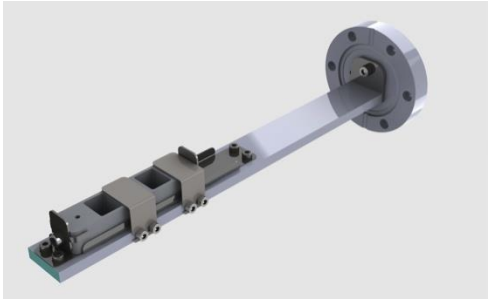

3D drawing of an In-Vacuum Reservoir

Substrate Heater

The substrate heaters are used for controlled temperature application during deposition processes.

Technical data

- For substrates up to 200 x 200 mm²
- HV and UHV-compatible versions
- up to 500 °C (depending on type)
- Temperature sensor type K

Options

- Water cooling
- Transparent heater (e.g. ITO)
- Additional temperature sensor for reference
- Temperature controller (s. page 58)

Example: 3D drawing of a substrate heater

High Temperature Substrate Heater

The substrate heater is designed to clean substrates on their deposition side prior to the deposition process.

Order code: HTH-x (see table below)

Technical data

- UHV-compatible up to 1700 °C
- Power density up to 45 W / cm²
- Temperature sensor type C

Options

- Assembly on linear feedthrough
- Additional temperature sensor for reference
- Temperature controller (s. page 58)

Example: 3D drawing of a substrate heater.

Heater dimensions*(mm)	P / I	Order Code
25 x 25	220 W / 8 A	HTH-25
50 x 50	1440 W / 16 A	HTH-50
70 x 70	2300 W / 17 A	HTH-70

*Detailed dimensions according to application.

Heating-Cooling Station

The heating-cooling station is used for controlled temperature application during deposition processes at low temperature regime.

Technical data

- Substrate size 25 x 25 mm²
- Temperature range: -190 °C - 150 °C
- Flange size DN40
- Water or LN2 cooling
- Power consumption 200 W

Options

- Adaptations for larger substrates
- Larger flanges

Right: 3D drawing of a heating-cooling station.

Automated Mask Station

The mask-holder is designed for automatic high-precision mask positioning.

Order code: AMS

Technical data

- Up to 4 masks
- Positioning accuracy: < 0.5 mm
- Minimum chamber size: DN250
- Electrically driven

Options

- Different mask sizes
- Customized mask layout
- Adjustment to chamber geometry
- Manual positioning

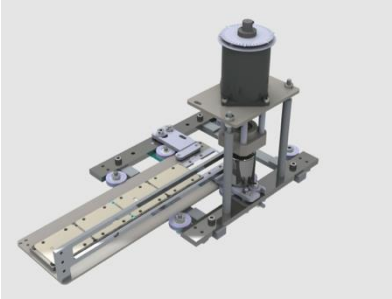

3D drawing of a mask-holder.

Segmented Viewport Shutter

The sun-blind viewport shutter is designed to protect viewports from deposition material while using very little space.

Order code: SVS (see table below)

Technical data

- DN100 or larger
- Flange thickness min. 20 mm
- Extends 35 mm into chamber when opened
- Bake out up to 150 °C

Options

- Different flange types and sizes
- Matching viewport

Right: 3D drawing of a DN100CF segmented viewport shutter.

Flange	[flange]	Order code
DN100CF*	-CF100	SVS-CF100
ISO-K100*	-ISO100	SVS-ISO100

*Larger flanges available. Just change order code correspondingly.

Source Shutters

Source shutters allow for interrupting the particle flow and protect the evaporation material from unwanted outside influence. We offer two classes of shutters, rotational shutters and flip shutters.

Rotational shutter

Classical rotational shutter for organic or metal sources. We are offering three different options for the shutter driver: manual, pneumatic, and electric. The mounting is always adapted according to the individual chamber/source setus. page

Flip shutter

An electrically driven flip shutter for organic or metal sources. The mounting is always adapted according to the individual chamber/source setup.

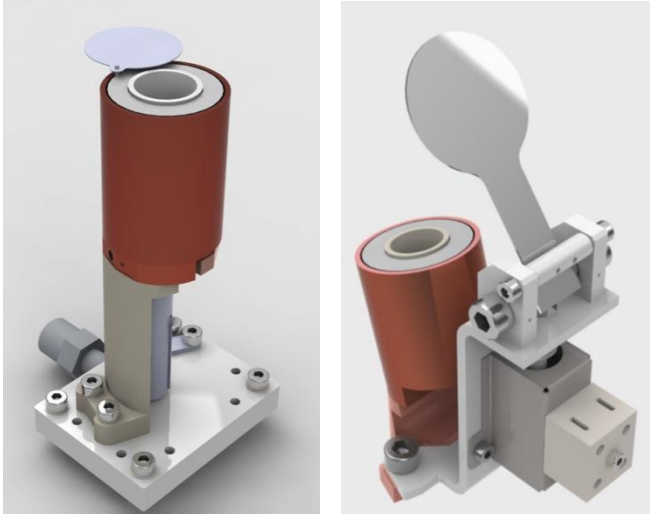

Left: Organic Molecular Evaporator on customized base with integrated rotational shutter (pneumatic).
Right: Organic Molecular Evaporator in flip shutter assembly.

Options	[mechanism]	Order code
Rotational shutter, manual	-RM	SHU-RM
Rotational shutter, pneumatic	-RP	SHU-RP
Rotational shutter, electric	-RE	SHU-RE
Flip shutter, electric	-FE-x*	SHU-FE-x*

*Please specify the size of the source: x = 2, 4, or 8. All other sizes will be custom-made.

- ***Customization:***
  Shutters will be adapted to individual customer needs depending on application and vacuum requirements. To find the right design for your experimental setup please contact us.

Customized Feedthroughs

CreaPhys offers customized bolt type feedthroughs to fit equipment of various manufacturers.

Technical data

- Bolt type M34
- O-ring sealed
- Bakeable up to 150 °C

Options

- Additional feedthroughs on request
- M32 or 1.25” on request

High-current feedthrough

- Up to 12.7 mm diameter
- Copper tube or rod

Order code*: FT-HC

Thermocouple feedthrough

- Type K, C or others
- Up to 5 pairs of pins

Order code*: FT-TH-[type]

Multi-pin current feedthrough

- Up to 10 pins
- Up to 10 A / pin

Order code*: FT-MP

Feedthrough for rate sensor

- With BNC-microdot type connector
- 2 line water cooling, compression fitting

Order code*: FT-RS

***Order code:**
Possible constellations are manifold. Please specify your needs along with the order code.

- ***Custom fabrication:***
  We also fabricate feedthroughs with custom measures according to individual needs. Please contact us.

a) High-current.

b) Thermocouple.

c) Current, multi-pin.

d) Rate sensor.

In-Vacuum Connectors

CreaPhys offers a variety of in-vacuum connectors for multi-pin feedthroughs. The connectors are built with stainless steel and PEEK as insulator to withstand high temperatures and resist common chemicals. The design of the connector allows for single pins to be inserted and removed with the cable attached. Pins are available in different materials for power and thermocouple applications.

Technical data

- Stainless steel parts
- PEEK-Isolator
- For temperatures up to 250 °C

Options

- 6, 10, or 20 pins
- Different contact materials available
- up to 10 A / pin or thermocouple

In-Vacuum Connectors

Pin Count	Dimensions (mm)			Order code
	A	B	C	
6	28	39	53	IVC-6
10	28	39	53	IVC-10
20	40	42	84.5	IVC-20

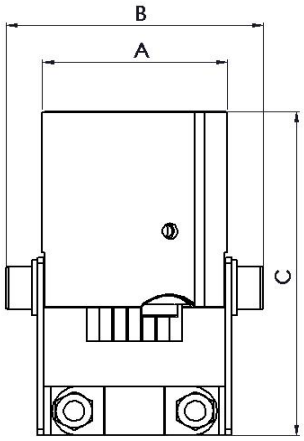

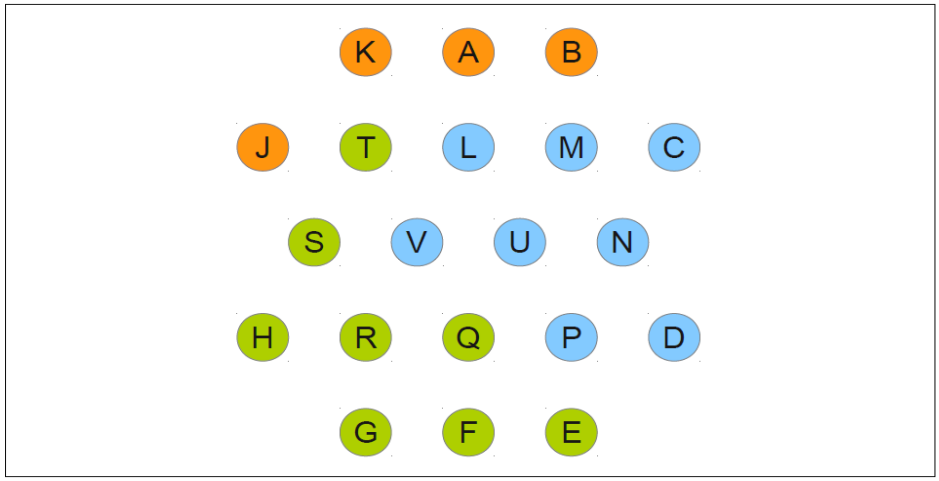

Pin	Material	Function	Pin	Material	Function
A	Cr	Evaporator 3 Power	L	Cr	Evaporator 4 Sh +
B	Al	Evaporator 4 Power	M	Al	Evaporator 4 Sh -
C	Cr	Evaporator 1 Sh +	N	Cr	Evaporator 2 Sh +
D	Al	Evaporator 1 Sh -	P	Al	Evaporator 2 Sh -
E	Cr	Evaporator 1 TC +	Q	Cr	Evaporator 2 TC +
F	Al	Evaporator 1 TC -	R	Al	Evaporator 2 TC -
G	Cr	Evaporator 3 TC +	S	Cr	Evaporator 4 TC +
H	Al	Evaporator 3 TC -	T	Al	Evaporator 4 TC -
J	Cr	Evaporator 1 Power	U	Al	Evaporator 3 Sh +
K	Al	Evaporator 2 Power	V	Cr	Evaporator 3 Sh -

Evaporator 1		Evaporator 2		Evaporator 3		Evaporator 4	
Power	J	Power	K	Power	A	Power	B
TC +	E	TC +	Q	TC +	G	TC +	S
TC -	F	TC -	R	TC -	H	TC -	T
Sh +	C	Sh +	N	Sh +	U	Sh +	L
Sh -	D	Sh -	P	Sh -	V	Sh -	M

Upper left: Technical drawing. Lower left: 3D image of a 6-pin in-vacuum connector. Right: Pin assignment for a 20-pin connector.

Special Equipment

Vacuum Transport Box

The Vacuum Transport Box has been designed for the safe transport of test structure, unsealed or fast degrading devices, and other sensitive equipment under inert gas or vacuum conditions.

Order code: VTB

Technical data

- Inside dimensions (vacuum box)
  300 mm x 250 mm x 120 mm
- Outside dimensions (without handle bars)
  360 mm x 300 mm x 170 mm
- Weight (stainless steel): approx. 15 kg
- Evacuation flange: DN16KF

Options

- Other dimensions on request
- Lightweight aluminum version

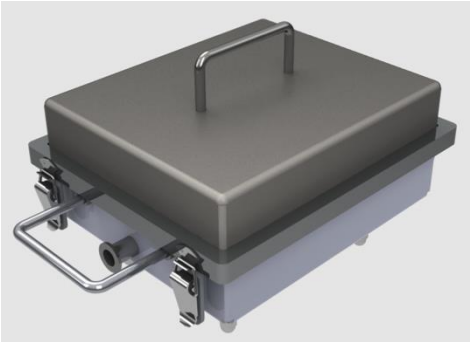

CreaPhys Vacuum Transport Box.

Purification Systems

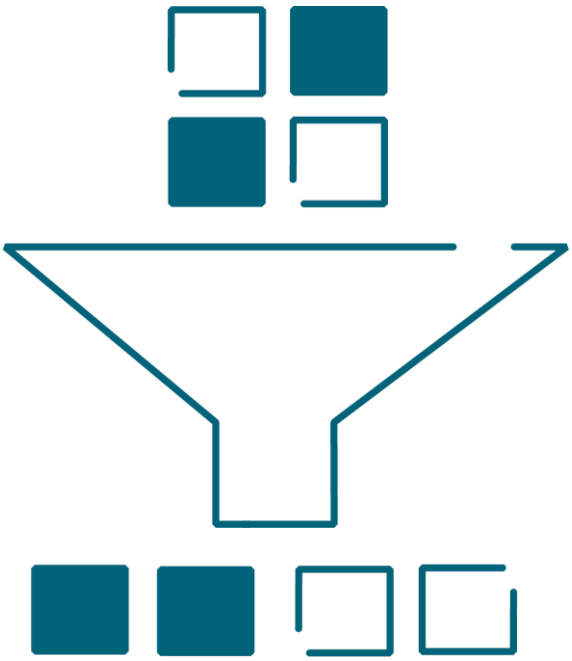

Tube-based Vacuum Sublimation System DSU-05 / DSU-20

Our Tube-based Vacuum Sublimation Systems DSU-05 and DSU-20 provide the means to purify organic volatile compounds by vacuum sublimation, both for sublimable and liquid phase compounds. This technology has been designed for application in organic opto-electronics (e.g. OLEDs, organic photovoltaics) but is also used in other areas demanding ultra-high purities such as nanotechnology, fine chemistry or pharmaceutical research.

Technical data

- Sublimation efficiency up to 97%
- Typical charge capacity
  DSU-05: 0.5 g ... 5 g
  DSU-20: 2 g … 20 g
- Defined temperature gradient
  Evaporation zone: 100 °C - 600 °C
  Deposition zones: 60 °C - 500 °C
- Base pressure < 10^{-6} mbar
- Transparent safety housing for vacuum operation
- Software kit for automated process control via personal computer or remote control via network

Options

- Glove box assembly for inert operation
- Carrier gas option (manual or automated)
- Low-temperature cold trap (e.g. LN2)
- Valved system for inert transport
- Bypass system
- Custom frame, e.g. for table top operation
- Various source options to fit material demands
- Systems of lower and higher capacities on request, e.g. DSU-02 (0.1 g - 2 g)

The DSU-05 and DSU-20 have (nominal) maximum capacities of 5 g and 20 g, respectively, which are, however, strongly dependent on the material properties like density, sublimation/melting behavior etc. Both systems feature a three zone gradient oven. It allows not only for setting the precise temperature of the tube, but also for setting the temperature gradient, which can span over > 200 K between evaporation and deposition zones. The latter is crucial to control the fractional re-condensation and, thus, the separation of the different constituents of the primary material.

Our DSU systems are highly modular to allow a flexible approach to each material.

Sublimation Systems DSU-x

Capacity	Dimensions (mm)					Code
(nominal)	Height*	Length**	Width	Tube diam.	Tube length	
5 g	1800	2200	600	34	600	DSU-05
20 g	1800	2200	600	52	850	DSU-20

*Standard frame for free-standing operation, other heights, e.g. for table-top setups, possible.
**Exact length depends on configuration.

Configuration:

Orientation	Remarks	[orientation]	Order code
Horizontal	Standard option	-H	DSU-[size]-H
Vertical	Required for liquid materials, space saving	-V	DSU-[size]-V
Tiltable	Horizontal and vertical operation possible	-VH	DSU-[size]-VH

- ***Custom requirements:***
  Smaller or larger systems and custom adaptions are available on request.

QUANTIpure® technology

The QUANTIpure® technology is an innovative and highly efficient purification technology. Based on more than 15 years of experience in vacuum sublimation CreaPhys designed and engineered the new family of purification systems. This family combines unique advantages like

- High process efficiency – combination of high yield and high purity
- compact vertical design with small foot print
- durable and robust system with stainless steel units
- automated direct process control
- high yield and constant quality
- scalability and direct process transfer within QUANTIpure® family
- high temperature homogeneity

QUANTIpure® technology uses a vertical design of the sublimation system to minimize floor space requirements. The vertical material flow suppresses trailing ashes. It also allows to process materials with a liquid phase without setup changes.

The system is composed of robust components made of stainless steel for high durability and long lifetime. A variety of coatings are available to match with higher materials demands.
An excellent temperature homogeneity combined with the direct temperature measurement allows a precise process control. The QUANTIpure® technology is able to process most of today's state-of-the-art materials at high yield resulting in highest purities of up to > 99.99%.
The direct process transfer within the QUANTIpure® family allows a highly efficient, low risk and fast scale-up from lab (DSU-300) to fab (DSU-2000).

Vacuum Sublimation System DSU-300

In contrast to the DSU-05 and DSU-20, the DSU-300 is not a glass tube based system. Instead it relies on a number of stainless steel body parts that are vertically interlaced to form a sublimation column. The modular Vacuum Sublimation System DSU-300 provides the ability to purify up to 300 g of volatile organic compounds per batch (depending on density). Typical applications are found in organic opto-electronic devices (e.g. OLEDs, organic photovoltaics), but may also be used in other areas demanding ultra-high purities such as nanotechnology, fine chemistry or pharmaceutics.

The compact vertical setup allows an easy and space-saving assembly in the lab or even within a glove box. The special design allows exact temperature control to prevent hot spots and to reduce decomposition. The DSU-300 can achieve temperature differences between evaporator and deposition unit of > 150 K (at 500 °C). Each unit is independently temperature controlled ensuring temperature uniformity of less than 5 K. A set of build-in sensors enables to measure the material temperature and detect even phase transitions. All process relevant parameters are monitored, controlled, and protocolled by an integrated computer control unit.

Technical data

- Batch size: up to 300 g / 300 ccm
- Temperature range
  Evaporation zone 100 °C - 550 °C
  Deposition unit 50 °C - 550 °C
- Temperature uniformity across deposition units < 5 K
- Inert surfaces (stainless steel; optional: enamel coating)
- source unit for solid and liquid phase materials
- Base pressure < $5*10^{-6}$ mbar
- Computer control unit and software kit for automated process control

Options

- Glove box assembly for inert operation
- Low-temperature cold trap (e.g. LN2)
- Various source options to fit material demands
- Various coatings for units to fit material demands
- Remote control via network
- higher temperature range on request

The DSU-300 is the smallest version of the new QUANTIpure® family of vacuum sublimation systems. The batch size targets pilot production and allows designing a process with reduced material usage. DSU-300 processes can easily be transferred to other systems of this family.

Due to the compact design the DSU-300 can be integrated into a glovebox. The individual components are designed for easy handling and cleaning.

Dimensions (mm):

Configuration	Height*	Width	Depth	Nominal capacity
DSU-300	2300	950	860	300g or 300ccm
DSU-300-GB	2400	2500	1100	300g or 300ccm

* fully assembled, maximum high of discrete units less than 2000mm

Vacuum Sublimation System DSU-2000

The DSU-2000 system is the next generation of the QUANTIpure® family. This robust stainless steel system uses also a vertical design. It provides almost a factor of 10 in capacity compared to DSU-300 while maintaining a small foot print. The Vacuum Sublimation System DSU-2000 provides the ability to purify up to 2kg of volatile organic compounds per batch (depending on density).

The Design of the QUANTIpure® family provides an direct process transfer from system to system This allows to establish a process with reduced material demand on the DSU-300 system and transfer it for high volume demands to the DSU-2000 system.

Technical data

- Batch size: up to 2kg / 2200 ccm
- Temperature range
  Evaporation zone 100 °C - 550 °C
  Deposition unit 50 °C - 550 °C
- Temperature uniformity across deposition units < 10 K
- Inert surfaces (stainless steel; optional: enamel coating)
- source unit for solid and liquid phase materials
- Base pressure < $5*10^{-6}$ mbar
- Computer control unit and software kit for automated process control

Options

- Low-temperature cold trap (e.g. LN2)
- Valved system and bypass pump system operation
- Various source options to fit material demands
- Various coatings for units to fit material demands
- Remote control via network
- higher temperature range on request

Dimensions (mm):

Configuration	Height*	Width	Depth	Nominal capacity
DSU-2000	2300	1250	1000	2kg or 2200ccm

* fully assembled, maximum high of discrete units less than 2000mm

Spare Parts for Sublimation Units

Glass tubing

If the glass tubing of the sublimation systems DSU-05 and DSU-20 need to be replaced you may order new sets. Also, spare parts allow for subsequent processes without having to wait for the cleaning process or for dedicated parts for certain materials.

Technical data

- Glass tubing to fit DSU-05 and DSU-20
- Inner deposition rings designed for optimum material separation
- Duran up to 450 °C
- Quartz up to > 600 °C

Options

- Tubing for DSU-05 or DSU-20
- Duran glass or quartz glass

Set of glass tubing (outer tube and inner rings) GTS-x

Size	[size]	Code
DSU-05	-05	GTS-05
DSU-20	-20	GTS-05

Material	[material]	Order Code
Duran glass	-D	GTS-[size]-D
Quartz glass	-Q	GTS-[size]-Q

Outer tube GT-x

Size	[size]	Code
DSU-05	-05	GT-05
DSU-20	-20	GT-05

Material	[material]	Order Code
Duran glass	-D	GT-[size]-D
Quartz glass	-Q	GT-[size]-Q

Order code example: GTS-05-D

A Duran glass tube for the DSU-05 together with a set of deposition rings.

High-Purity Materials

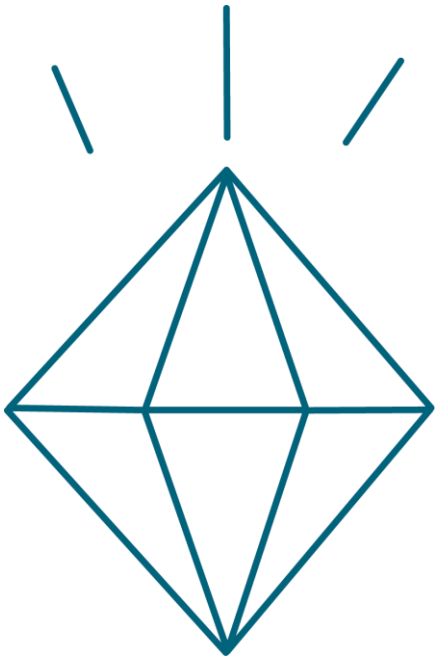

High-Purity Materials

We offer high-purity materials for organic electronics. CreaPhys uses its own proprietary purification technique to guarantee the highest purities at very competitive cost. All our high-purity materials have undergone one or multiple sublimation steps to reach their final purity. Our standard materials are available, both, in R&D scale and in production size quantities.

Please ask us for quotes.

High-purity Materials

- Available materials: Alq_3, NPB, Zn-PC, Cu-PC, Fullerenes C_{60} and C_{70}
- All materials are “sublimed grade”.
- Purities up to > 99.99 % (opto-electronic grade) are available.
- All materials are available in gram to kilogram quantities.

Options

- Other commercially available materials on request
- Purification service for proprietary materials
- Fast delivery (< 3 days) for some materials available
- Single crystalline materials for R&D

- ***Quotations:***
  Please contact us for a quotation for high-purity organic materials or fullerenes.

High-purity organic materials

Alq_3

Grade	Purity	[grade]	Standard quantities*	Order code
High-purity	1 x sublimed	-HP	1g, 5g, 10g	ALQ3-HP-[quantity]
Ultrahigh-purity	2 x sublimed	-UHP	1g, 5g, 10g	ALQ3-UHP-[quantity]
Opto-electronic	Multiple sublimed	-OE	1g, 5g, 10g	ALQ3-OE-[quantity]

* typical delivery times for standard quantities < 10 days, express shipment possible. Larger amounts (up to multi-kilo) on request.

NPB

Grade	Purity (HPLC)	[grade]	Standard quantities*	Order code
High-purity	> 99.9 %	-HP	1g, 5g, 10g	NPB-HP-[quantity]
Ultra-high-purity	> 99.95 %	-UHP	1g, 5g, 10g	NPB-UHP-[quantity]

* typical delivery times for standard quantities < 10 days, express shipment possible. Larger amounts (up to multi-kilo) on request.

Kilogram quantities of opto-electronic grade organic materials: NPB (left) and Zn-phthalocyanine (right).

Zn-Phthalocyanine

Grade	Purity	[grade]	Standard quantities*	Order code
High-purity	1 x sublimed	-HP	1g, 5g, 10g	ZNPC-HP-[quantity]
Opto-electronic	2 x sublimed	-OE	1g, 5g, 10g	ZNPC-OE-[quantity]

* typical delivery times for standard quantities < 10 days, express shipment possible. Larger amounts (up to multi-kilo) on request.

Cu-Phthalocyanine

Grade	Purity	[grade]	Standard quantities*	Order code
High-purity	1 x sublimed	-HP	1g, 5g, 10g	CUPC-HP-[quantity]
Opto-electronic	2 x sublimed	-OE	1g, 5g, 10g	CUPC-OE-[quantity]

* typical delivery times for standard quantities < 10 days, express shipment possible. Larger amounts (up to multi-kilo) on request.

High-purity Fullerenes

Fullerene C_{60}

Grade	Purity (HPLC)	[grade]	Standard quantities*	Order code
Ultra-high-purity	> 99.95 %	-UHP	1g, 5g, 10g	C60-UHP-[quantity]
Opto-electronic	99.99 %	-OE	1g, 5g	C60-OE-[quantity]

* typical delivery times for standard quantities < 10 days, express shipment possible. Larger amounts (up to multi-kilo) on request.

Fullerene C_{70}

Grade	Purity (HPLC)	[grade]	Standard quantities*	Order code
High-purity	> 99.9 %	-HP	1g, 5g	C70-HP-[quantity]
Ultra-high-purity	> 99.95 %	-UHP	1g	C70-UHP-[quantity]

* typical delivery times for standard quantities < 10 days, express shipment possible. Larger amounts (up to 100 g) on request.

Highly purified C60

- ***Quotations:***
  Please contact us for a quotation for high-purity organic materials or fullerenes.

High-Purity Custom Materials

We offer research grade materials for organic electronics according to customer needs. Former projects range from purification for device performance optimization to growth of single molecular crystals.

High-purity custom materials: Heliatek's absorber material for OPV (left), Zn-pc single crystal needles (center), C_{60} crystallite (right)

- ***R&D materials:***
  Please contact us with your specific requirements.

Control Units

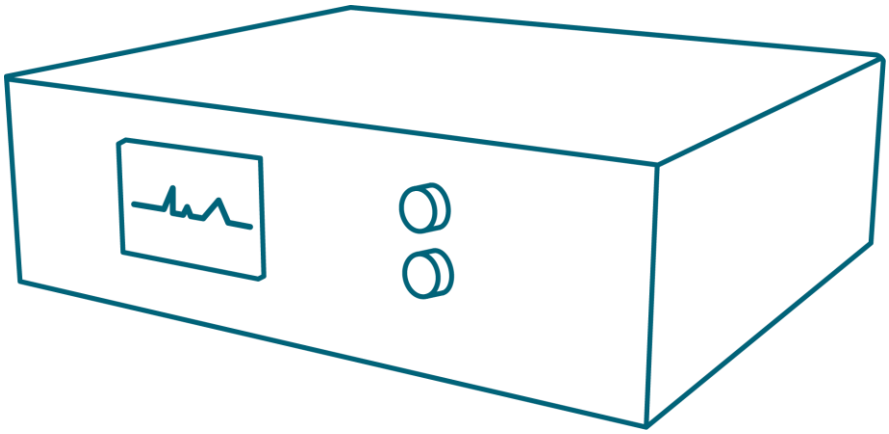

Temperature Control Units

The Temperature Control Units of our TCU-Series have been developed as universal control units, which will go hand in hand with the CreaPhys hardware as well as with most equipment from other OEMs.

Our PID temperature controllers are classified according to their power output in three sub-series for low-, medium-, and high-power applications. These are labeled TCU-100, TCU-200, and TCU-300-Series, respectively. Typical medium-power applications include, e.g., controlling thermal evaporators while high-power is needed for sublimation systems.

Technical data

- Based on Eurotherm® PID temperature controller
- Temperature resolution: 0.1 K
- Temperature sensor: type K
- RS485 digital communication interface

Options

- Housing: desktop or rack
- Supply voltages: 230 V or 115 V
- Sensor types: C, R, S, T and others on request (e.g. PT100, B, J, L)

Temperature Control Unit TCU-110

The temperature measurement and control unit TCU-110 is designed as a flexible building block for larger systems. The integrated RS485 Modbus communications allows for the TCU-110 to be used as a temperature monitoring device with a personal computer. With the configurable outputs it is also easy to connect an external power supply and use the TCU-110 as a fully capable temperature controller.

There is also a version with a current monitor that can be connected to the monitor signal of the external power supply for easy monitoring of the applied power.

Technical data

- Based on Eurotherm® PID temperature controller
- Temperature resolution: 0.1 K
- Temperature sensor: Type K
- RS485 digital communication
- Analog control output
- 1 configurable digital and relay output
- Mains voltage: 100 V - 240 V

Options

- Current display
- Sensor types: C, R, S, T and others on request (e.g. PT100, B, J, L)

Temperature Control Unit TCU-110-x

Configuration:

Display	[housing]	Order code
Without current display	-N	TCU-110-N
With current display	-D	TCU-110-D

Evaporation Control: TCU-200-Series

- ***Designed for:***

  Evaporation sources: CreaPhys DE-x and DE-[multi]-x, other OEMs

The Temperature Control Units TCU-200 are designed to be used with molecular evaporators or other applications. The high quality integrated power supply reduces system complexity and enables an easy and quick setus. page Controllers are available with up to three channels. Each channel is isolated and features potential-free outputs with short-circuit and open loop protection. The output current is regulated by an industry grade Eurotherm® PID temperature controller.

Additionally, each channel is equipped with a digital display for easy monitoring of the applied current. For conveniently monitoring your evaporators using a personal computer each TCU-200 is equipped with a RS485 Modbus interface.

Technical data

- Based on Eurotherm® PID temperature controller
- Temperature resolution: 0.1 K
- Temperature sensor: type K
- Output power per channel: max. 120 W
- Output voltage / current:
  0 V - 52 V / 0 A - 10 A
- 1 configurable digital and relay contact per channel
- RS485 digital communication interface

Options

- Housing: desktop or rack
- Supply voltages: 230 V or 115 V
- Sensor types: C, R, S, T and others on request (e.g. PT100, B, J, L)
- External rate control via I/O

Evaporation Control: TCU-200-Series

Configuration:

Number of Channels	[type]	Code
1	-210	TCU-210
2	-220	TCU-220
3	-230	TCU-230

Housing	[housing]	Dimensions (mm)	Code
Desktop	-D	450 x 140 x 340 (165 x 140 x 280)*	TCU-[type]-D
Rack	-R	3U 84HP 340mm	TCU-[type]-R

*for 1-Channel version.

Supply Voltage	[voltage]	Order code
230 V	-230V	TCU-[type]-[housing]-230V
115 V	-115V	TCU-[type]-[housing]-115V

Order code example: TCU-220-D-230V

A two channel Temperature Control Unit for evaporation sources in a desktop housing with 230 V supply voltage.

Sublimation Control: TCU-300-Series

- ***Designed for:***

  Sublimation systems DSU-05, DSU-20

The Temperature Control Units of the TCU-300 Series are temperature measurement and control units designed for high power applications. They have been designed to serve, in particular, as controllers for sublimation systems, but may also be used for various other high power applications. The integrated industry grade Eurotherm® PID temperature controller in combination with solid state switching relays allows for precise temperature measurement and control of all high power ovens and heaters.

The device is by default equipped with RS485 Modbus communications for monitoring and controlling with a personal computer.

Technical data

- Based on Eurotherm® PID temperature controller
- Temperature sensor: type K
- Temperature resolution: 0.1 K
- Output current: max. 8 A
- RS485 digital communication
- Output type: switched mains voltage
- Mains voltage: 110 V - 240 V

Options

- Housing: desktop or rack
- Sensor types: C, R, S, T and others on request (e.g. PT100, B, J, L)
- Usable as controller for chamber bake-out
- High power with 3-phase mains voltage

Sublimation Control: TCU-300-Series

Configuration:

Number of Channels	[type]	Code
1	-310	TCU-310
2	-320	TCU-320
3	-330	TCU-330

Housing	[housing]	Dimensions (mm)	Order code
Desktop	-D	450 x 140 x 340 (165 x 140 x 280)*	TCU-[type]-D
Rack	-R	3U 84HP 340mm	TCU-[type]-R

*for 1-Channel version.

Order code example: TCU-330-R

A three channel high power Temperature Control Unit in a rack housing that may serve as sublimation control unit for a CreaPhys DSU-05 or DSU-20 sublimation system (s. page 44).

Shutter Control Unit

- ***Designed for:***

  All CreaPhys shutters (s. page 35), other manufacturers (adaptions if needed)

The Shutter Control Unit is a micro controller based device designed to operate a wide variety of actuators. It is highly configurable and available with different voltages.

For easy integration in larger systems it features RS232/RS485 digital communications as well as digital inputs and outputs.

Technical data

- 2 configurable channels
- 2 digital inputs per channel
- 1 relay contact per channel
- RS485 communications
- Mains voltage: 100 V - 240 V

Options

- Output voltages: 12 V and 24 V

Shutter Control Unit SCU-x

Configuration:

Output Voltage	[housing]	Order code
12 V	-12V	SCU-101-12V
24 V	-24V	SCU-101-24V

CreaPhys GmbH
Niedersedlitzer Straße 75 A
01257 Dresden / Germany
www.creaphys.com

Phone: +49 (0) 351/407 916–20
Fax: +49 (0) 351/407 916–22
Email: info@creaphys.com